PHASE 7
OPL
USER'S MANUAL

American Dryer Corporation
88 Currant Road
Fall River, MA 02720-4781
Telephone: (508) 678-9000 / Fax: (508) 678-9447
E-mail: techsupport@amdry.com
www.amdry.com

071999SC/cms

ADC Part No. 113100

Retain This Manual In A Safe Place For Future Reference

Please read this manual carefully to thoroughly familiarize yourself with the Phase 7 OPL computer system features, operational instructions, and programming characteristics. This manual contains important information on how to employ all the features of your new **ADC** dryer in the safest and most economical way.

American Dryer Corporation products embody advanced concepts in engineering, design, and safety. If this product is properly maintained, it will provide many years of safe, efficient, and trouble-free operation.

We have tried to make this manual as complete as possible and hope you will find it useful. **ADC** reserves the right to make changes from time to time, without notice or obligation, in prices, specifications, colors, and material, and to change or discontinue models.

"IMPORTANT NOTE TO PURCHASER"

Information must be obtained from your local gas supplier on the instructions to be followed if the user smells gas. These instructions must be posted in a prominent location near the dryer.

IMPORTANT

YOU MUST DISCONNECT and LOCKOUT THE ELECTRIC SUPPLY and THE GAS SUPPLY or THE STEAM SUPPLY BEFORE ANY COVERS or GUARDS ARE REMOVED FROM THE MACHINE TO ALLOW ACCESS FOR CLEANING, ADJUSTING, INSTALLATION, or TESTING OF ANY EQUIPMENT per OSHA (Occupational Safety and Health Administration) **STANDARDS.**

FOR YOUR SAFETY

DO NOT STORE OR USE GASOLINE OR OTHER FLAMMABLE VAPOR AND LIQUIDS IN THE VICINITY OF THIS OR ANY OTHER APPLIANCE.

DO NOT DRY MOP HEADS IN THE DRYER.

DO NOT USE DRYER IN THE PRESENCE OF DRY CLEANING FUMES.

WARNING

CHILDREN SHOULD NOT BE ALLOWED TO PLAY ON OR IN THE DRYERS.

CHILDREN SHOULD BE SUPERVISED IF NEAR DRYERS IN OPERATION.

CAUTION

DRYERS SHOULD NEVER BE LEFT UNATTENDED WHILE IN OPERATION.

IMPORTANT

PLEASE OBSERVE ALL SAFETY PRECAUTIONS displayed on the equipment and specified in the installation and operator's manual included with the dryer.

Dryers **must not** be installed or stored in an area where it will be exposed to water or weather.

Table of Contents

SECTION I
INTRODUCTION

Phase 7 "On-Premise Laundry" Microprocessor Drying System

The **American Dryer Corporation's** Phase 7 On-Premise Laundry (OPL) Drying System has been designed with super performance in mind to provide for better temperature regulation, efficiency, performance, consistency, and faster drying times.

Specifically, **ADC's** Phase 7 OPL System's higher performance emanates from the following enhancements:

1. The ability to better control the temperature inside the basket (tumbler) throughout the various cycles.
2. The Phase 7 OPL microprocessor controller (computer) responds immediately to any temperature variations from temperature selection, which enables the control temperature band to be ±3º from this selected drying temperature. The narrower temperature control band greatly increases system efficiency, since it takes less heat to maintain a given temperature than to rise to a given temperature.

Among its many amenities, **ADC's** Phase 7 OPL Drying System has a true Automatic Drying Cycle. The Phase 7 OPL Automatic Drying Cycle **(Patent No. 4,827,627)** principle is based on one of the most fundamental laws of thermodynamics which governs the flow of heat in thermal systems.

Utilizing this microprocessor technology, the user simply has to place the load in the dryer and push one single button to start drying cycle. The Phase 7 OPL microprocessor controller (computer) will directly monitor the moisture content in the load and stop the drying cycle automatically when the selected percentage of extraction (dryness level) is reached.

The **ADC** Phase 7 OPL Automatic Drying Cycle **(Patent No. 4,827,627)** virtually eliminates all guess work. The Phase 7 OPL microprocessor controller (computer) determines how much drying time is needed and compensates for various types of fabrics and load sizes, thus, avoiding damage to fabrics by over drying, as well as avoiding wasted time and energy for any given load. Once the Phase 7 microprocessor controller (computer) determines the load is dry, the microprocessor controller will go into cool down cycle **(Patent No. 4,827,627)** until the preprogrammed time or temperature is reached, and then shuts the dryer off automatically.

SECTION II

FEATURES

A. **Dependable Microprocessor Solid State Integrated Circuitry** - to eliminate as many moving parts as possible.

B. **Program Changes Are Easily Made At The Keyboard** - actual programs are viewed at the L.E.D. display for verification.

C. **Automatic Drying Cycle (Patent No. 4,827,627)** - computerized monitoring of load dryness for precise, fast, and efficient drying.

D. **Timed (Manual) Drying Cycle** - for special loads, programming allows for a specific amount of time in minutes for both drying and cool down cycles.

E. **Preprogrammed Cycles** - the Phase 7 OPL microprocessor controller (computer) can store in its memory six (6) preprogrammed cycles in either the Automatic Drying Mode **(Patent No. 4,827,627)** or Manual Drying Mode in the A-F keys and an additional 100 in the numerical memory of 0-99.

F. **Manually Loaded Cycles** - for occasional or one-time special loads, the user can set a specific program in either the Automatic Drying Cycle (**Patent No. 4,827,627)** or Manual Timed Drying Cycle.

G. **Variable (Programmable) Fabric/Temperature Selections** - accommodates the type of fabric to be dried.

H. **Cool Down Program** - Lowers the temperature of the exhaust to make the material cool enough to handle.

I. **L.E.D. Display** - informs user of cycle status, programs and displays important diagnostic and fault codes.

J. **Wrinkle Guard Program** - helps keep items wrinkle-free when they are not removed from the dryer promptly at the end of the drying and cooling cycles.

K. **Diagnostics** - major circuits, including the door switch(s), microprocessor temperature sensor, motors, and heat output circuits and more are monitored.

L. **Audio Alert Signal** - The tone will sound at the end of a complete drying cycle at a one second rate for the duration programmed. It will also sound for any fault conditions at a quarter second rate for 4 beeps. Finally there is a 3 beep warning at the beginning of every Wrinkle Guard On Cycle.

M. **Temperature Conversion Status** - temperature-related programs can be set in either Fahrenheit (ºF) or Celsius (ºC). All temperatures will automatically convert to the corresponding values (+/-1ºF) when changes are made.

N. **Hi-Temperature Protection** - if the Phase 7 OPL microprocessor controller (computer) senses that the temperature in the basket (tumbler) has reached 225ºF, it will shut the dryer down completely, and a fault code will appear in the L.E.D. display indicating an overheating problem.

O. **Cycle Preview** - entire dryer parameters (programs) or the preprogrammed cycles are displayed for verification upon a coded entry to the keypad (touchpad).

P. **Reversing Option** - helps reduce the balling up or tangling of large items. A cycle can be set to have the reversing option where the basket (tumbler) will turn in the forward direction From 30 to 120 seconds, stop from 7 to 10 seconds, and then proceed in the reverse direction for the same time. This process is repeated throughout the drying and cooling cycles.

Q. **RPM** - Phase 7 microprocessor controller also displays tumbler RPM by pressing the Down Arrow Key and holding it, the tumbler RPM will be displayed. (The tumbler must be rotating for approximately 30 seconds before getting a true RPM reading)

R. **Clean Lint** - this feature monitors the value of the "Lint Count" register. The register contains the acceptable limit of dryer cycles the machine will be allowed operate before the microprocessor locks the user out. Once the feature prompts the user to "CLEAN LINT DRAWER" the dryer is now in a locked state and **will not** be cleared until the Lint Drawer has been cleaned. When the Lint Drawer is opened, the display will read "LINT DRAWER OPEN" and when the Lint Drawer is closed, the display will read "READY". (NOTE: the Lint Drawer must be opened for 15 seconds or more for the reset to occur.) The dryer circuit is now active and can be programmed.

S. **Language Selection** - Phase 7 has the ability to display 5 different languages, English, French, Spanish, Italian, German.

T. **Model Selection**- The Phase 7 can be programmed to be used on 3 modes of heat. Gas single burner (200), Gas double burner (310, 410), Steam (200, 310, 410)

U. **L.E.D. Display Modes**- The display can be changed to scroll pixel or character. Also, the scrolled messages can be either continuous, continuous with a pause or just one time. The speed of the scroll is also adjustable for operators preference.

V. **Factory Settings** - This feature will set all programmed parameters to thier default values.

W. **Keypad Symbols** - ○ = "CLEAR/STOP" key

| = "ENTER/START" key

△ = Scroll Up

▽ = Scroll Down

SECTION III

PROGRAM SELECTIONS

A. PREPROGRAMMED CYCLES

1) A-F Cycles
The Phase 7 OPL microprocessor controller (computer) can store in its memory six (6) preprogrammed cycles (Keys "A" through "F" on the keyboard [touchpad]). This allows the user to have the six (6) most commonly used cycles, requiring only the push of a single keyboard entry to start the dryer.

2) 0-99 Cycles
The Phase 7 OPL microprocessor controller (computer) can store 100 preprogrammed cycles in its numerical memory. (Use Keys "0" through "99" on the keyboard [touchpad]). This allows the user to have up to 100 customized programmed cycle that may not be as commonly used as the (6) "A" - "F". These are not one touch entries to start the dryer like the "A" - "F". They are selected by entering the number which represents the cycle desired and pressing the "START/ENTER" key to start the cycle.

Both types of the preprogrammed cycles can be set in either the Automatic Drying Cycle (Mode) **(Patent 4,82727),** where the drying cycle will end when the percentage of extraction (dryness level) programmed has been reached, or in the Manual Timed Drying Cycle (Mode) where the dryer will operate for the specific drying time programmed. These cycles can be programmed in any combination.

Once the drying cycle is completed, the Phase 7 OPL microprocessor controller then goes into the Cool Down Cycle where the articles are tumbled at room temperature. Once the programmed Cool Down Cycle is completed, the Phase 7 OPL microprocessor controller (computer) will go to the next step (Wrinkle Guard).

When the cooling cycle is completed, the dryer will go into the Wrinkle Guard Cycle. Where the load will be tumbled without heat for 2- minutes. It will then Stop for 2- minutes. This process is repeated until either the doors are opened, Stop key pressed or, 99- minutes has elapsed, whichever comes first. When Wrinkle Guard is ended, the display will read "CYCLE DONE". At this point the dryer is locked out from drying again until the doors are opened. This will insure that if a cycle has been completed, it will be attended to by the operator, before starting another heat cycle.

NOTE:	On an Auto Door Machine, The Door controls are not active while the Fan Motor is on. One must press the "STOP/CLEAR" key to stop the Fan Motor and open the doors or wait for the Fan Motor to stop on it's own (Wrinkle Guard Off Time) to open the doors.

Preprogrammed Cycle Menu Selections:

1. Automatic Drying Cycle (Mode) **(Patent No. 4,82,7,627,)**

   a. The Phase 7 OPL microprocessor controller (computer) can be programmed to reverse or not reverse (single direction rotation). This is done in "DRYER SETUP" parameter.

   b. Drying Temperature - programmable from 160ºF to 200ºF in one-degree increments or from 71ºC to 93ºC in one-degree increments.

   c. Dryness Level (percentage of extraction) - programmable from 90% to 100% in one-percent increments.

d. Cool Down Time - programmable from 0 to 99 minutes in one-minute increments.

e. Cool Down Temperature - programmable from 70ºF to 100ºF in one-degree increments or from 20ºC to 37ºC in one-degree increments.

f. "A" Factor - Programmable from 0 to 9

g. "B" Factor - Programmable from 0 to 99

2. Timed (Manual) Cycle (Mode)

a. The Phase 7 OPL microprocessor controller (computer) can be programmed to reverse or not reverse (single direction rotation). This is done in "DRYER SETUP" parameter.

b. Drying Time - programmable from 0 to 99 minutes in one-minute increments.

c. Drying Temperature - programmable from 100ºF to 200ºF in one-degree increments or from 37ºC to 93ºC in one-degree increments.

d. Cool Down Time - programmable from 0 to 99 minutes in one-minute increments.

e. Cool Down Temperature - programmable from 70ºF to 100ºF in one-degree increments or from 20ºC to 37ºC in one-degree increments.

f. The Spin Time can be programmed from 30 seconds to 120 seconds in one-second increments. This is done in "COOL DOWN" Menu

g. The Stop (Dwell) Time can be programmed from 7 seconds to 10 seconds in one-second increments. This is done in "COOL DOWN" Menu

All six (A-F) preprogrammed cycles along with cycles 0 - 99 have been programmed by the factory as outlined on **page 49**. However, even though cycles "A -F" are the most common cycles used, they **should be** reviewed to ensure they meet the location application or needs. Should changes be found necessary, refer to the Programming Section of this manual.

B. MANUALLY LOADED CYCLES

For occasional or one-time special loads, the operator must enter the specific program features needed. This cycle is not stored within the Phase 7 OPL microprocessor controller (computer) and **must be** entered each and every time.

The Manually Loaded Cycle can be set in either the Automatic Drying Cycle (Mode) **(Patent No. 4,827,627)** or the Timed (Manual) Drying Cycle (Mode). These are selected by pressing the "AUTO" or "MAN" keys on the keypad.

Manually Loaded Cycle Menu Selections:

1. Automatic Drying Cycle (Mode) **(Patent No. 4,827,627)**

   a. Drying Temperature - programmable from 160ºF to 200ºF in one-degree increments or from 71ºC to 93ºC in one-degree increments.

   b. Dryness Level (percentage of extraction) - programmable from 90% (less dry) to 100% (more dry) in one-percent increments.

   c. The operator has the choice of Reverse or No Reverse (single direction rotation) depending on what it has been set for in "DRYER SETUP". The choice is "SELECT REVERSE" or "ALWAYS REVERSE".

   d. Press "ENTER/START" ⊡. This will start the cycle

NOTE: If Always Reverse is selected, then there will not be a part (c) of the Auto Drying Menu above. The operator will not be asked to select reverse or not.

The Manually Loaded Auto Cycle has the "A" and "B" Factors set in "DRYER SETUP". The (A-F) and (0-99) cycles that have been selected to be Auto , have separate Factors for each cycle. All the parameters set in "COOL DOWN SETUP" also pertain to the Manually loaded Auto and Manual cycles.

2. Manually Loaded Cycles

   a. Drying Time - programmable from 0 to 99 minutes in one minute increments.

   b. Cool Down Time - programmable from 0 to 99 minutes in one minute increments.

   c. Drying Temperature - programmable from 100°F to 200°F in one-degree increments or from 37°C to 93°C in one-degree increments.

   d. The operator has the choice of Reverse or No Reverse (single direction rotation) depending on what it has been set for in "DRYER SETUP". The choice is "SELECT REVERSE" or "ALWAYS REVERSE".

   e. Press "ENTER/START" ⊡. This will start the cycle

NOTE: If Always Reverse is selected, then there will not be a part (d) of the Manually Drying Menu above. The operator will not be asked to select reverse or not.

C. AUTOMATIC DRYING CYCLE (Mode) (Patent No. 4,827,627)

In this mode, the Phase 7 OPL microprocessor controller (computer) determines how much drying time is needed and compensates for various types of fabric and load sizes, all automatically. The Phase 7 OPL microprocessor controller (computer) accomplishes this by calculating the dryness level (percentage of extraction) using the temperature selected, as well as, the "A" and "B " factors preset by the factory.

The Phase 7 OPL microprocessor controller (computer) monitors the first three (3) heat peaks (slopes), at which time it calculates the "A" Slope and "B" (heat loss) factors along with the percentage of extraction selected. When the Phase 7 OPL microprocessor controller (computer) determines that all the factors are met, the drying cycle will end, and the dryer will go into the cool down cycle.

Automatic Drying Cycle (Mode.) (Patent No. 4,827,627) Selections:

1 . Drying Temperature - programmable from 160º to 200ºF in one-degree increments or from 71ºC to 93ºC in one-degree increments.

2. Dryness Level (percentage of extraction) - programmable from 90% (less dry) to 100% (more dry) in one-percent increments.

3. Cool Down Time - programmable from 0 to 99 minutes in one minute increments.

4. Cool Down Temperature - programmable from 70ºF to 100ºF in one-degree increments or from 20ºC to 37ºC in one-degree increments.

5. Factors (Program Location - "Dryer Setup")

   a. Factor "A" Slope Program - the Phase 7 OPL microprocessor controller (computer) monitors how long it takes to get to the selected temperature.

      1) Program selections are 1 through 9 in increments of one (1).

   b. Factor "B" Heat Loss (offset) Program - this factor setting is dependent upon the model dryer and the type of heating unit.

      1) Program selections are 1 through 99 in increments of one (1)

The Manually Loaded Auto Cycle has the "A" and "B" Factors set in "DRYER SETUP". The (A-F) and (0-99) cycles that have been selected to be Auto, have separate Factors for each cycle. All the parameters set in "COOL DOWN SETUP" also pertain to the Manually loaded Auto and Manual cycles.

The "A" and 'B" Factors have been preprogrammed by the factory as outlined on **page 51** and **SHOULD NOT BE CHANGED** unless the Phase 7 OPL microprocessor controller (computer) should fail and is being replaced. The replacement Phase 7 OPL microprocessor controller **MUST BE PROGRAMMED** for the particular dryer model and heating unit as shown in the "A" and "B" Factor table on **page 51** of this manual.

D. TIMED (MANUAL) DRYING CYCLE OPERATION (Mode)

This drying cycle is intended for special loads where a specific amount of drying time and cooling time is needed, especially for fine, delicate items which require very low temperatures and long drying and/or cool down time periods.
All the parameters set in "COOL DOWN SETUP" pertain to the Manually loaded Manual and Auto cycles. The (A-F) and (0-99) cycles that have been selected to be Manual, have separate settings for all the parameters contained in the "COOL DOWN SETUP" menu

Timed (Manual) Cycle (Mode) Selections:

1) Drying Time - programmable from 0 to 99 minutes in one-minute increments.

2) Cool Down Time - programmable from 0-99 minutes in one-minute increments.

3) Drying Temperature - programmable from 100°F to 200°F in one-degree increments or from 37°C to 93°C in one-degree increments.

4) For optional reversing, the Phase 7 OPL microprocessor controller can be programmed to reverse or no reverse (single detection rotation). This is done in "DRYER SETUP".

5) Wrinkle Guard is always active.

E. TEMPERATURE SELECTIONS (Drying Temperatures)

Operating Temperature Selections:

1. Automatic Drying Cycle (Mode) **(Patent No. 4,827,627)** - programmable from 160º to 200ºF in one-degree increments or from 71ºC to 93ºC in one-degree increments.

2. Timed (Manual) Drying Cycle (Mode) - programmable from 100ºF to 200ºF in one-degree increments or from 37ºC to 93ºC in one-degree increments.

F. COOL DOWN CYCLE

Cool Down Cycle Selections:

1. Preprogrammed Cycles (Auto/Manual)

   1) Cool Down Time - 0 to 99 minutes in one-minute increments.

   2) Cool Down Temperature - 70ºF to 100ºF in one-degree increments or from 20ºC to 37ºC in one-degree increments.

NOTE: The Cool Down Cycle will run either until the Cool Down Temperature is reached or until the Cool Down Time has expired, whichever comes first.

2. Manually Loaded Cycles

   a. Automatic Drying Cycle (Mode) **(Patent No. 4,827,627)**

      1) Cool Down Time - 0 to 99 minutes in one-minute increments.

      2) Cool Down Temperature - 70ºF to 100ºF in one-degree increments or from 20ºC to 37ºC in one-degree increments.

NOTE: Both the Cool Down Time and the Cool Down Temperature are selected in "COOL DOWN SETUP". The Spin and Stop (Dwell) Time are fixed.

   b. Timed (Manual) Drying Cycle (Mode)

      1) Cool Down Time - 0 to 99 minutes in one-minute increments.

      2) Cool Down Temperature - 70ºF to 100ºF in one-degree increments or from 20ºC to 37ºC in one-degree increments.

NOTE: The Cool Down Temperature, Spin Time, and Stop (Dwell) Time is selected in "COOL DOWN SETUP"

NOTE: The Cool Down Cycle will run either until the Cool Down Temperature is reached or until the Cool Down Time has expired, whichever comes first.

NOTE: If there has been no Drying Time selected, then the Cool Down Cycle will ignore the Cool Down Temp and do the Cool Down Time only.

G. L.E.D. DOT MATRIX DISPLAY

The L.E.D. (light emitting diode) display informs the user of cycle status, program verification, and displays important diagnostic and fault information. A complete listing of the various display messages and their meanings are shown on **page 27 - 29** of this manual.

Display Selections:

0 . Scroll Mode
   a. Pixel - This mode will scroll every message, (that exceeds the display limit) from left to right dropping off a pixel column at a time.
   b. Character - This mode will scroll every message, (that exceeds the display limit) from left to right dropping off a character at a time.

1 . Scroll Type
   a. One Time - This will scroll the message once and stop at the beginning of the message.
   b. Continuous With Pause - This will scroll the message then pause a brief second at the beginning of the message before scrolling again. This will happen continuously.
   c. Continuous - This will scroll the message continuously without a brief pause at the beginning of the message.

2. Scroll Speed 1 to 20
   1 being the slowest and 20 being the fastest.

Cycle in Progress Display Status

During the Drying cycle, the display will indicate the type of cycle in progress by presenting either one of the following:

1. “AUTO DRYING CYCLE” - Manually Loaded Auto Cycle
2. “AUTO DRYING CYCLE #” - The “#” is replaced with (A-F) or (0-99)
3. “MANUAL DRYING CYCLE” - Manually Loaded Manual Cycle
4. “MANUAL DRYING CYCLE #” - The “#” is replaced with (A-F) or (0-99)

H. CYCLE IN PROGRESS TEMPERATURE DISPLAY

While the dryer cycle is in progress, the temperature in the basket (tumbler) can be displayed by pressing and holding the "UP-ARROW" Key. The temperature will be displayed in either Fahrenheit (ºF) or Celsius (ºC), depending on what the system temperature has been set for in "Dryer Setup".

I. TEMPERATURE CONVERSION STATUS

Temperature related programs are programmable to be operated in either Fahrenheit (ºF) or Celsius (ºC). The Temperature selection is made in "SYSTEM TEMP". Programs affected are:

1. Temperature Display Mode
2. Temperature Selections (drying temperatures)
3. Cool Down Temperatures

IMPORTANT: When changing the temperature conversion status from Fahrenheit or Celsius or vice versa, ALL the Temperature Selections and Cool Down Temperatures will be changed accordingly. The Phase 7 OPL microprocessor controller (computer) automatically calculates and converts the temperatures in these programs to the previously set value. For example, when changing from ºF to ºC, if the preprogrammed Cycle "A" drying temperature was set for 160ºF, the Phase 7 OPL microprocessor controller (computer) will change to 71ºC (+/- [1] one-degree Celsius).

J. WRINKLE GUARD PROGRAM

This program keeps items wrinkle-free when they are not removed from the dryer promptly at the end of the drying cycle and/or cooling cycle.

When the drying and cooling cycles are completed, the dryer will shut off, the tone will sound, and the L.E.D. display will read "WRINKLE GUARD". If the door is not opened, or cycle stopped. The Phase 7 OPL microprocessor controller (computer) will wait until the Wrinkle Guard Delay Time of 2 minutes has expired at which time the fan will start and the basket (tumbler) will rotate (without heat) for the Wrinkle Guard On Time of 2 minutes. The Phase 7 OPL microprocessor controller (computer) will repeat this process until the Maximum Wrinkle Guard Time of 99 minutes has expired or until the door is opened, or cycle stopped, whichever comes first. Prior to each On Time, there is a 3 beep warning that the fan and basket rotation are about to start. The beeps at the end of the Wrinkle Guard cycle can be programmed to be ON/OFF. This is done in "WRINKLE GUARD SETUP".

Wrinkle Guard Program Selections:

1. Wrinkle Guard Audio Alert On/Off

   The operator can select to turn on or off the beeps at the end of each Wrinkle Guard cycle.

K. AUDIO ALERT SIGNAL

The tone will sound at the end of the Cool Down Cycle to indicate that the cycle is complete. Programming allows for the elimination of the tone during the Wrinkle Guard Cycle. This is done in "WRINKLE GUARD SETUP". Programming also allows the beeps to be set from 0 to 10 times in increments of 1. This is done in "DRYER SETUP".

L. PREPROGRAMMED CYCLE PREVIEW

The parameters of the preprogrammed cycles can be displayed for verification. To view an "A-F" preset program (parameter), simply press the "ENTER/START" I key and the desired preset program "A-F". The L.E.D. display will read the program parameter settings, then return to the "READY" display mode. To view a "0-99" preset program parameter, simply press the "ENTER/START" I key and the desired preset program number 0-99 and press the "ENTER/START" I key again. The L.E.D. display will read the program parameter settings, then return to the "READY" display mode.

M. REVERSING OPTION

This feature helps reduce balling up or tangling of large items.

Reversing Option Selections:

1. Reverse On or Reverse Off

2. Select Reverse or Always Reverse

3. Basket (tumbler) Spin Time and Dwell (Stop) Time

   a. Fixed in the Automatic "AUTO" Mode and **cannot be changed**.

      1) Spin Time - 2-1/2 minutes Forward and 2 minute Reverse

      2) Dwell (stop) Time - 7 seconds.

4. Basket (tumbler) Spin Time and Dwell (Stop) Time

   a. Programmable in the Manual Mode.

      1) Spin Time - programmable from 30 seconds to 120 seconds in one-second increments.

      2) Dwell (stop) Time - programmable from 7 seconds to 10 seconds in one-second increments.

N. DIAGNOSTICS

The Phase 7 OPL , microprocessor controller (computer) monitors both " Drying and Mechanical function." they are as follows:

1. Drying Functions: These include Temperatures, Burners, Sail Switches, Blower, Tumbler, and Lint Drawer.

2. Mechanical Functions: These involve Doors and tilts

O. PROGRAM LOCATIONS

This is where system parameters are programmed. These system parameters (programs) are stored in memory. Access to this location is acquired by pressing the "CLEAR/STOP" ⊡ and the "UP-ARROW" together. To exit the Programming Location, simply press the "CLEAR/STOP" ⊡ key. If you are several menu layers deep, continue to press the "CLEAR/STOP" ⊡ key until you are all the way out of the programming mode.

0. SELECT LANGUAGE - This menu allows the selection of 5 different languages to operate the dryer. The language that is selected will be used for every displayed message as well as Faults and Menus.

   ENGLISH
   FRANCAIS
   ESPANOL
   ITALIANO
   DEUTSCH

1. SELECT SYSTEM PARAMETERS - This menu level has 4 sections . All programmable parameters other than preprogrammed cycles are done here.

   0. DRYER SETUP - All parameters that pertain to drying are in this menu level.

      0. SELECT MODEL - This allows the selection of the heat source applied to the dryer.
         GAS DOUBLE BURNER
         GAS SINGLE BURNER
         STEAM

      1. SYSTEM TEMP - This selection controls whether the temperature-related programs will be operated in Fahrenheit (ºF) or Celsius (ºC). The programs affected are as follows:

         1) Temperature Display Mode.

         2) Temperature Selections (drying temperatures).

         3) Cool Down Temperatures.

IMPORTANT: The Phase 7 OPL microprocessor controller (computer) automatically calculates and converts the temperatures in these programs to the previously set value. For example, when changing from ºF to ºC, if the preprogrammed Cycle "A" drying temperature was set for 160ºF,the Phase 7 OPL microprocessor controller (computer) will change to 71ºC (+/- one-degree Celsius).

2. REVERSE MODE - This selection allows the operator to have a choice of Reverse or No Reverse (single direction rotation) basket (tumbler) action in the manually loaded cycles ONLY.

SELECT REVERSE - When this parameter (program) is chosen, the Phase 7 OPL microprocessor controller (computer) will prompt the operator to decide whether or not the manually loaded cycle entered is to be a reversing cycle.

ALWAYS REVERSE - In this operational mode the operator has no choice. Any manually loaded cycle entered will be a reversing cycle.

3. ENTER "A" FACTOR 1 TO 9 - This parameter (program) is one of the factors that the Phase 7 OPL microprocessor controller (computer) uses when programmed in the Automatic Drying Cycle (Mode) **(Patent No. 4,827,627)**. This factor pertains to the thermal characteristics of each model dryer. In this Slope Program the Phase 7 OPL microprocessor controller (computer) monitors how long it takes for the dryer to get to the selected temperature. The range of adjustment of this slope factor is 1 through 9 in increments of one (1).

1)This slope factor has been programmed by the factory as outlined on **page 51** and **SHOULD NOT BE CHANGED** unless the Phase 7 OPL microprocessor controller (computer) should fail and is being replaced. The replacement Phase 7 OPL microprocessor controller (computer) **MUST BE PROGRAMMED** for the particular dryer model and heating unit as shown in the "A" and "B" Factor table on **page 51** of this manual.

4. ENTER "B" FACTOR 1 TO 99 - this parameter (program) is one of the factors that the Phase 7 OPL microprocessor controller (computer) uses when programmed in the Automatic Drying Cycle (Mode) **(Patent No. 4,827,627)**. This factor also pertains to the thermal characteristics of each model dryer. This factor setting is dependent upon the model dryer and the type of heating unit. The range of adjustment of this slope factor is 1 through 99 in increments of one (1).

1) This factor (Factor "B") has been programmed by the factory as outlined on **page 51** and **SHOULD NOT BE CHANGED** unless the Phase 7 OPL microprocessor controller (computer) should fail and is being replaced. The replacement Phase 7 OPL microprocessor controller (computer) **MUST BE PROGRAMMED** for the particular dryer model and heating unit as shown in the "A" and "B" Factor table on **page 51** of this manual.

5. ENTER LINT COUNT 1 TO 5 - This selection sets the maximum amount of cycles it will run before being locked out (out of service). The operator will be prompted to clean the lint drawer to continue drying.

NOTE: A minimum of 15 seconds is required to have the Lint Drawer opened in order to return to the "READY" state once it is closed.

6. ENTER AUDIO ALERT ON TIMES 0 TO 10 - This selection allows the operator to adjust the amount of signal tones. This parameter (program) affects the tone at the end of the Cool Down cycle, as well as, at the end of the Wrinkle Guard cycle.

1. DISPLAY SETUP - All parameters that pertain to the display is in this menu level.

0. SELECT SCROLL MODE - The operator has the choice of having the display scroll each Pixel (vertical line) or Character (letter).

1. SELECT SCROLL TYPE - The operator has the choice of scroll type as follows:

CONTINUOUS WITH PAUSE - This will continually scroll the message with a pause at the beginning.

CONTINUOUS - This will continually scroll without pausing at the beginning of the message.

ONE TIME - This will only scroll the message once and stop at the beginning for the message.

2. SELECT SCROLL SPEED 1 TO 20 - 1=slowest and 20=fastest

2 COOL DOWN SETUP - The parameters that pertain to the Cool Down is in this menu level.

0. ENTER COOL DOWN TIME 0 TO 99 MINUTES - This parameter (program) affects ONLY the Automatic Drying Cycle **(Patent No. 4,827,627)** when the manually loaded cycle is selected.

1. ENTER COOL DOWN TEMPERATURE - This parameter (program) affects ONLY the Automatic Drying Cycle **(Patent No. 4,827,627)** when the manually loaded cycle is selected. The Cool Down Temperature is programmable from 70ºF to 100ºF in one-degree increments and from 20ºC to 37ºC in one-degree increments.

2. ENTER SPIN TIME 30 TO 120 SECONDS - This parameter (program) is fixed at 2-1/2 minutes in the Forward direction and 2 minutes in the Reverse direction for the Automatic Mode. In the Manual Mode, it is programmable. This Spin Time is programmed here for the manually loaded Manual Cycle only.

3. ENTER STOP TIME 7 TO 10 SECONDS - This parameter (program) is fixed at 7 seconds in the Automatic Mode and programmable in the Manual Mode. This Stop (Dwell) Time is programed here for the manually loaded Manual Cycle only.

3. WRINKLE GUARD SETUP - The parameters that pertain to the Wrinkle Guard is in this menu level.

0. WRINKLE GUARD AUDIO ALERT - This parameter (program) allows the operator to turn the Audio Alert tone On or Off at the end of each Wrinkle Guard Cycle. The Amount is the same that is selected in Dryer Setup for AUDIO ALERT ON TIME 0 TO 10.

AUDIO ALERT ON
AUDIO ALERT OFF

2. PROGRAM “A”-“F” CYCLE - This menu allows the programming of cycle “A” - “F”. The parameters selected in this menu for each letter will be stored in memory for that key. This will allow the operator to utilize one touch drying through keys “A”-“F”.

3. PROGRAM “0”-“99” CYCLE - This menu allows the programming of cycle “0”-“99”. The parameters selected in this menu for each number will be stored in memory for that number key(s). This will allow the operator to utilize preprogrammed drying cycles stored in memory under a numerical location.

NOTE: BOTH THE “A”-“F” AND “0”-“99” ALLOWS FOR A TOTAL OFF 106 PREPROGRAMMED LOCATIONS FOR CUSTOM DRYING.

4. DEFAULT SETTINGS - This menu allows the operator to set ALL the programmable parameters to the default settings. This option has a password selection of 1 2 3.

CAUTION: Once the settings have been set to their default settings, there is no way to retrieve the old settings. Use caution when using this feature.

SECTION IV

OPERATING INSTRUCTIONS

The Phase 7 OPL microprocessor controller (computer) allows the operator to choose from six (6) preprogrammed cycles (Key "A" through Key "F"). These have been preprogrammed by the factory with the parameters (programs) shown on **page 49**. There are an additional ("0" through "99") preprogrammable cycles that are preprogrammed by the factory with the parameters (programs) shown on **page 49**. For occasional or one-time special loads, the manually loaded cycles can be used where the operator must set the specific program(s) needed.

NOTE: Refer to **Section III** of this manual for a complete explanation of the various cycles/ selections available.

After the load is put into the basket (tumbler) and the dryer is ready to dry, determine which cycle will best suit the application (type of load). We recommend using the Automatic Drying Cycle **(Patent No. 4,827,627)** for most loads. This cycle provides for the best drying in the shortest time, all automatically.

A. OPERATING SEQUENCE

1. Preprogrammed Cycles

   a. Automatic Drying Cycle **(Patent No. 4,827,627)**

      1) L.E.D. display reads "READY" (no cycle in progress).

      2) Press the letter on the keyboard (touchpad) corresponding to the cycle desired (i.e., Key "A").

   NOTE: (0-99) WILL REQUIRE THE "START/ENTER" KEY TO BE PRESSED AFTER THE NUMBER IS SELECTED IN ORDER TO ACCEPT THE SELECTION AND START DRYING.

      3) The dryer will then start.(i.e., Blower, tumbler and heat)

      4) L.E.D. display reads AUTO DRYING CYCLE A, ELAPSED TIME__ MIN 00:00. During the drying cycle, the Phase 7 OPL microprocessor controller (computer) will monitoring the amount of moisture in the load. Once the temperature is above 160 F, the Cycle Status portion of the L.E.D. will change from ELAPSED TIME __ MIN to __% DRY. The display will count upward until the percentage of extraction programmed is reached.

NOTE: Press the "UP ARROW" to view the tumbler temperature at any time.

NOTE: The dryer can be stopped at any time by pressing the "CLEAR/STOP" Key. If the temperature is above the Cool Down setpoint when the "CLEAR/STOP" is pressed, the dryer will go into a Cool Down cycle. If the "CLEAR/STOP" key is pressed again at this point the cycle that was in progress **will be cancelled** and returned to the "READY" state. If the temperature is below the Cool Down set point. The cycle that was in progress **will be cancelled**, and go to the Wrinkle Guard.

5) Once the preprogrammed percentage of extraction (dryness level) is reached, the drying cycle will end, and the Cool Down Cycle will begin.

6) Once the COOL DOWN Cycle begins at the end of the heat cycle the L.E.D. display will read COOL DOWN TEMP ___/___MINUTES REMAINING. At the end of the heat cycle the dryer will shut off the heat, and continue the Fan and Tumbler until the Cool Down time, or temperature is reached.

7) Once the COOL DOWN cycle is completed the Phase 7 OPL microprocessor controller (computer) will proceed into the Wrinkle Guard cycle. The Audio Alert tone will sound (for amount set in Audio Alert ON time). The L.E.D. display will read "WRINKLE GUARD". The times are fixed at 2 minutes OFF, 2 minutes ON for a max time of 99 minutes. These times are not programmable. During the ON time, the Blower (fan) and the basket (tumbler) will start to rotate (without heat for 2 minutes). The Phase 7 OPL microprocessor controller (computer) will repeat this process until the Maximum Wrinkle Guard On Time has expired (99 minutes). The L.E.D. display will then read "CYCLE DONE" and lockout the dryer functions until the doors are opened. It will then return to "READY".

NOTE: Mechanical functions of the dryer are not allowed during the ON time. The Blower (fan) must be OFF to perform mechanical functions. However the "CLEAR/STOP" key may be pressed at any time to end the Wrinkle Guard cycle. Mechanical functions of the dryer are allowed during the OFF time.

b. <u>Timed (Manual) Drying Cycle</u>

1) L.E.D. display reads "READY" (no cycle in progress).

2) Press the letter on the keyboard (touchpad) corresponding to the cycle desired (i.e., Key "D").

NOTE: (0-99) WILL REQUIRE THE "START/ENTER" KEY TO BE PRESSED AFTER THE NUMBER IS SELECTED IN ORDER TO ACCEPT THE SELECTION AND START DRYING.

3) The dryer will then start. (i.e, Blower, tumbler and heat)

4) The L.E.D. display will read MANUAL DRYING CYCLE D, 00:00 MIN REMAIN.

NOTE: Press the "UP ARROW" to view the tumbler temperature at any time.

NOTE: The dryer can be stopped at any time by pressing the "CLEAR/STOP" Key. If the temperature is above the Cool Down setpoint when the "CLEAR/STOP" is pressed, the dryer will go into a Cool Down cycle. If the "CLEAR/STOP" key is pressed again at this point the cycle that was in progress **<u>will be cancelled</u>** and returned to the "READY" state. If the temperature is below the Cool Down set point. The cycle that was in progress **<u>will be cancelled</u>**, and go to Wrinkle Guard.

5) When the programmed drying time has expired, the Phase 7 OPL microprocessor controller (computer) will proceed into the Cool Down Cycle (Mode).

6) Once the COOL DOWN Cycle begins at the end of the heat cycle the L.E.D. display will read COOL DOWN TEMP ___/___MINUTE REMAINING. At the end of the heat cycle the dryer will shut off the heat, and continue the Fan and Tumbler until the Cool Down time, or temperature is reached.

7) Once the COOL DOWN cycle is completed the Phase 7 OPL microprocessor controller (computer) will proceed into the Wrinkle Guard cycle. The Audio Alert tone will sound (for amount set in Audio Alert ON time). The L.E.D. display will read "WRINKLE GUARD". The times are fixed at 2 minutes OFF, 2 minutes ON for a max time of 99 minutes. These times are not programmable. During the ON time, the Blower (fan) and the basket (tumbler) will start to rotate (without heat for 2 minutes). The Phase 7 OPL microprocessor controller (computer) will repeat this process until the Maximum Wrinkle Guard On Time has expired (99 minutes). The L.E.D. display will then read "CYCLE DONE" and lockout the dryer functions until the doors are opened. It will then return to "READY".

NOTE: Mechanical functions of the dryer is not allowed during the ON time. The Blower (fan) must be OFF to perform mechanical functions. However the "CLEAR/STOP" key may be pressed at any time to end the Wrinkle Guard cycle. Mechanical functions of the dryer is allowed during the OFF time.

2. Manually Loaded Cycles

a. Automatic Drying Cycle **(Patent No. 4,827,627)**

1) L.E.D. display reads "READY" (no cycle in progress).

2) Press Auto Key.

3) L.E.D. display will now read ENTER DRY TEMP 160 TO 200. (Defaults to 160°F or 71° C) Enter the temperature desired (from 160ºF to 200ºF in one-degree increments or from 71ºC to 93ºC in one-degree increments). i.e., for 180 ºF, press Key "1", Key "8", Key "0", and then press the "ENTER/START" Key to accept the value.

4) L.E.D. display will now read ENTER DRY LEVEL 90 TO 100. enter the percentage of extraction (dryness level desired) from 90% to 100% in one-percent increments (Defaults to 100%). i.e., for 95%, press Key "9", Key "5", and then press the "ENTER/START" Key to accept the value.

5) L.E.D. display will now read "SELECT REVERSE MODE" (Default to ON). The ON/OFF selection can be toggled with the UP & DOWN ARROWS. Once selected, press the "ENTER/START" Key to accept selection.

NOTE: In addition to entering a value by pressing the number keys, the UP and DOWN ARROWS can be used to scroll to the number desired or toggle between selections.

6) The dryer will now display "PRESS START". Press the "ENTER/START" Key to start the dryer. The L.E.D. display will read AUTO DRYING CYCLE, ELAPSED TIME__MIN. During the Drying Cycle, the Phase 7 OPL microprocessor controller (computer) is monitoring the moisture in the load. Once the temperature is above 160 F, the Cycle Status portion of the L.E.D. will change from ELAPSED TIME __ MIN to __% DRY. The display will count upward until the percentage of extraction programmed is reached.

NOTE: Press and hold the "UP ARROW" to view the tumbler temperature at any time.

NOTE: The dryer can be stopped at any time by pressing the "CLEAR/STOP" ⊡ Key. If the temperature is above the Cool Down setpoint when the "CLEAR/STOP" is pressed, then it will go into a Cool Down cycle. If the "CLEAR/STOP" ⊡ key is pressed again at this point the cycle that was in progress **will be cancelled** and returned to the "READY" state. If the temperature is below the Cool Down set point. The cycle that was in progress **will be cancelled**, and go to the Wrinkle Guard.

7) Once the preprogrammed percentage of extraction (dryness level) is reached, the drying cycle will end, and the Cool Down Cycle will begin.

8) Once the COOL DOWN Cycle begins at the end of the heat cycle the L.E.D. display will read COOL DOWN TEMP ___/___MINUTES REMAINING. At the end of the heat cycle the dryer will shut off the heat, and continue the Fan and Tumbler until the Cool Down time, or temperature is reached.

9) Once the COOL DOWN cycle is completed the Phase 7 OPL microprocessor controller (computer) will proceed into the Wrinkle Guard cycle. The Audio Alert tone will sound (for amount set in Audio Alert ON time). The L.E.D. display will read "WRINKLE GUARD". The times are fixed at 2 minutes OFF, 2 minutes ON for a max time of 99 minutes. These times are not programmable. During the ON time, the Blower (fan) and the basket (tumbler) will start to rotate (without heat for 2 minutes). The Phase 7OPL microprocessor controller (computer) will repeat this process until the Maximum Wrinkle Guard On Time has expired (99 minutes). The L.E.D. display will then read "CYCLE DONE" and lockout the dryer functions until the doors are opened. It will then return to "READY".

NOTE: Mechanical functions of the dryer are not allowed during the ON time. The Blower (fan) must be OFF to perform mechanical functions. However the "CLEAR/STOP" ⊡ key may be pressed at any time to end the Wrinkle Guard cycle. Mechanical functions of the dryer are allowed during the OFF time.

b. Timed (Manual) Dryer Cycle

1) L.E.D. display reads "READY" (no cycle in progress).

2) Press Key [MAN]

3) L.E.D. display will now read "ENTER DRY TIME 0 TO 99 MINUTES" (Defaults to 0). i.e., for 40 minutes, press Key "4", Key "0", and then press the "ENTER/START" ⊡ Key to accept the value.

4) L.E.D. display will now read "ENTER DRY TEMP __ TO __" (Default 100°F or 37°C) Enter the temperature desired (from 100ºF to 200ºF in one-degree increments or from 37ºC to 93ºC in one-degree increments). i.e., for 182 ºF, press Key "1", Key "8", Key "2", and then press the "ENTER/START" ⊡ Key to accept the value.

5) L.E.D. display will now read "ENTER COOL DOWN TIME 0 TO 99 MINUTES".i.e., for 10 minutes, press Key "1", Key "0", and then press the "ENTER/START" ⊡ Key to accept the value.

6) L.E.D. display will now read "SELECT REVERSE MODE" (Default to ON). The ON/OFF selection can be toggled with the UP & DOWN ARROWS. Once selected, press the "ENTER/START" ⊡ Key to accept selection.

NOTE: The "SELECT REVERSE MODE" option will only display if Select Reverse is programmed in Dryer Setup under Reverse Mode.

7) The dryer will now display "PRESS START". Press the "ENTER/START" ⊡ Key to start the dryer. The L.E.D. display will read MANUAL DRYING CYCLE, __MINUTES REMAIN.

NOTE: The dryer can be stopped at any time by pressing the "CLEAR/STOP"⊡ Key. If the temperature is above the Cool Down setpoint when the "CLEAR/STOP" ⊡ is pressed, then it will go into a Cool Down cycle. If the "CLEAR/STOP"⊡ key is pressed again at this point the cycle that was in progress **will be cancelled** and returned to the "READY" state. If the temperature is below the Cool Down set point. The cycle that was in progress **will be cancelled**, and go to Wrinkle Guard.

8) Once the programmed drying time has expired, the Phase 7 OPL microprocessor controller (computer) will proceed into the Cool Down Cycle (Mode).

9) Once the COOL DOWN Cycle begins at the end of the heat cycle the L.E.D. display will read COOL DOWN TEMP ___/___MINUTES REMAINING. At the end of the heat cycle the dryer will shut off the heat, and continue the Fan and Tumbler until the Cool Down time, or temperature is reached.

10) Once the COOL DOWN cycle is completed the Phase 7 OPL microprocessor controller (computer) will proceed into the Wrinkle Guard cycle. The Audio Alert tone will sound (for amount set in Audio Alert ON time). The L.E.D. display will read "WRINKLE GUARD". The times are fixed at 2 minutes OFF, 2 minutes ON for a max time of 99 minutes. These times are not programmable. During the ON time, the Blower (fan) and the basket (tumbler) will start to rotate (without heat for 2 minutes). The Phase 7 OPL microprocessor controller (computer) will repeat this process until the Maximum Wrinkle Guard On Time has expired (99 minutes). The L.E.D. display will then read "CYCLE DONE" and lockout the dryer functions until the doors are opened. It will then return to "READY".

NOTE: Mechanical functions of the dryer are not allowed during the ON time. The Blower (fan) must be OFF to perform mechanical functions. However the "CLEAR/STOP" ⊡ key may be pressed at any time to end the Wrinkle Guard cycle. Mechanical functions of the dryer are allowed during the OFF time.

B. OPERATING NOTES

1. All mechanical functions on an Auto machine (Doors/Tilt) can only take place when the Blower (Fan) is turned off. i.e., If the selector switch for opening the doors is selected while in a drying cycle, there will be no action until the Blower (Fan) is turned off.

2. On a Manual machine, the Phase 7 OPL microprocessor controller (computer) will display a fault condition and stop the cycle if the doors open or machine tilts in the middle of a cycle. (Blower still on)

3. The RPM of the tumbler can be displayed by pressing and holding the DOWN ARROW key while a cycle is in progress. If cycle has not been started, the display will read CPU Board Voltage Value. (23 - 26 Volts is normal)

4. The dryer can be stopped at anytime by pressing the "CLEAR/STOP" key. If the temperature is above the Cool Down setpoint when the "CLEAR/STOP" key is pressed, the dryer will go into a Cool Down Cycle. If the "CLEAR/STOP" key is pressed again at this point the cycle that was in progress **will be cancelled** and returned to the "READY" state. If the temperature is below the Cool Down setpoint. The cycle that was in progress will be cancelled and go to the Wrinkle Guard.

5. When programming a Manually Loaded cycle, if an error is made making an entry, press the "CLEAR/STOP" key ONCE, and the entry **will be cancelled**. Re-enter the selection. If the selection is entered and an error is made, the "CLEAR/STOP" key will cancel the program and return to the "READY" state.

6. Use the UP and DOWN ARROWS to scroll through menus or increase/decrease number values or toggle between choices.

7. In the programming mode, the number of keys can be used to jump to menu levels without scrolling through them all. i.e., from 0 select Model in Dryer Setup, you can jump to menu level 5. Enter lint count under Dryer Setup by pressing the 5 key followed by "ENTER/START" key to accept value. L.E.D. display will read 5: ENTER Lint Count 1 to 5.

8. The Tumbler temperature can be displayed by pressing and holding the UP ARROW key.

9. The programmed cycle parameter can be viewed by pressing the "ENTER/START" key followed by the A-F key. To view 0-99 cycles, press "ENTER/START" followed by the number desired to view followed by "ENTER/START" . The viewing can be stopped by pressing the "CLEAR/STOP at anytime.

SECTION V

L.E.D. DISPLAY MESSAGES

The L.E.D. display informs the operator of cycle status, program verification, and displays important diagnostic messages and fault information.

A. L.E.D. DISPLAY OPERATING STATUS

1. Cycles in Progress

   a. While the dryer is operating, the L.E.D. display will read which cycle is in progress. i.e., in a Manual Drying Cycle (Mode), the L.E.D. display will read "MANUAL DRYING CYCLE". In the Cool Down Cycle (Mode) the L.E.D. display will read "COOL DOWN TEMP __, __ MINUTES REMAIN".

2. Cycle Status

   a. While a cycle is in progress, the L.E.D. display will show the progress of the cycle that is being processed.

      1) Automatic Drying Cycle

         a) While a cycle is in progress the cycle status will display ELAPSED TIME__MIN. During the Drying Cycle, the Phase 7 OPL microprocessor controller (computer) is monitoring the moisture in the load. Once the temperature is above 160 F, the Cycle Status portion of the L.E.D. will change from ELAPSED TIME __ MIN to __% DRY. The display will count upward until the percentage of extraction programmed is reached.

      2) Timed (Manual) Drying Cycle

         a) While a cycle is in progress the cycle status, will display __ MINUTES REMAIN.

3. Alternate Display Programs

   a. The tumblers RPM can be displayed by pressing and holding the Down Arrow key while a cycle is in progress. If a cycle is not in progress, the board voltage is displayed.

   b. The Tumbler temperature can be displayed by pressing and holding the Up Arrow key at any time.

B. DISPLAY MESSAGES

ALWAYS REVERSE
AUDIO ALERT OFF
AUDIO ALERT ON
AUTO

AUTO DRYING CYCLES __, DRYING TEMP __, DRYING LEVEL __
MANUAL DRYING CYCLES __, DRYING TEMP __, DRYING TIME __, MINUTES
AUTO DRYING CYCLES __, ELAPSE TIME __ : __ MINUTES
AUTO DRYING CYCLES, __% DRY
MANUAL DRYING CYCLES __, __ :__ MINUTES REMAIN
COOL DOWN TEMP __, __:__ MINUTES REMAIN
COOL DOWN TEMP __, COOL DOWN TIME __ MINUTES
MODEL ERROR, ENTER CORRECT MODEL

BAD PROBE
CALL FOR SERVICE
CHARACTER
CHECK CONTROL POWER
CLEAN LINT DRAWER
COMFIRM DEFAULTS
CONTINUOUS
CONTINUOUS WITH PAUSE
COOL DOWN SETUP
CYCLE DONE
DEFAULT SET
DEFAULT SETTINGS
DEG C
DEG F
DEUTSCH
DISPLAY SETUP
DRY ENABLE FAULT
DRYER SETUP

ENGLISH
ENTER 00-99
ENTER ‘A’ FACTOR 1 TO 9
ENTER AUDIO ALERT ON TIME 0 TO 10 SECONDS
ENTER ‘B’ FACTOR 1 TO 99
ENTER LINT COUNT 1 TO 5
ENTER COOL DOWN TEMP __ TO __
ENTER COOL DOWN TIME 0 TO 99 MINUTES
ENTER DRY LEVEL 90 TO 100 __%
ENTER DRY TEMP __ TO __
ENTER DRY TIME 0 TO 99 MINUTES
ENTER PASSWORD
ENTER SPIN TIME 30 TO 120 SECONDS
ENTER STOP TIME 7 TO 10 SECONDS
ESPANOL
ERROR ERROR
EXHAUST HIGH LIMIT FAULT
EXHAUST HIGH TEMP FAULT

FACTOR ‘A’ __
FACTOR ‘B’ __
FAN CONTACTOR FAULT
FAN OVER LOAD FAULT
FRANCAIS
FRONT BURNER HIGH LIMIT FAULT
FRONT BURNER IGNITION CONTROL FAULT
FRONT BURNER VALVE FAULT
FRONT DOORS NOT CLOSED
FRONT NOT DOWN
FRONT SAIL SWITCH CLOSE FAULT
FRONT SAIL SWITCH OPEN FAULT

GAS DOUBLE BURNER
GAS SINGLE BURNER
ITALIANO
LINT DRAWER OPEN
LOW VOLTAGE FAULT
MANUAL
NO
OFF
ON
ONE TIME
PIXEL
PRESS START
PROGRAM 00-99 CYCLE
PROGRAM A-F CYCLE
PROGRAM MODE
READY
REAR BURNER IGNITION CONTROL FAULT
REAR BURNER HIGH LIMIT FAULT
REAR BURNER VALVE FAULT
REAR DOORS NOT CLOSED
REAR NOT DOWN
REAR SAIL SWITCH CLOSE FAULT
REAR SAIL SWITCH OPEN FAULT
ROTATION FAULT
ROTATION MODE

SELECT A-F KEY
SELECT CYCLE TYPE
SELECT LANGUAGE
SELECT MODEL
SELECT REVERSE
SELECT REVERSE MODE
SELECT SCROLL MODE
SELECT SCROLL SPEED 1 TO 20
SELECT SCROLL TYPE
SELECT SYSTEM PARAMETERS
SENSOR OFF
SENSOR ON
SPIN TIME __
STEAM
STOP TIME __
SYSTEM CHECK

SYSTEM TEMP
TUMBLER OVER LOAD FAULT
VIEW CYCLE?
WRINKLE GUARD
WRINKLE GUARD AUDIO ALERT
WRINKLE GUARD SETUP
YES

SECTION VI

PROGRAMMING INSTRUCTIONS

A. INTRODUCTION TO PROGRAMMING

The various program selections are stored in the Phase 7 OPL microprocessor controller (computer) and are broken down into five (5) categories:

0. Language (ENGLISH, FRANCAIS, ESPANOL, ITALIANO, DEUTSCH)

1. System Parameters (Dryer Setup, Display Setup, Cool Down Setup, Wrinkle Guard Setup)

2. Preprogrammed Cycles (Key "A" through Key "F")
   a. This feature allows the operator to have six (6) most commonly used cycle selections awaiting the push of a single keypad entry to start the dryer.

3. Preprogrammed Cycles ("0" through "99")
   a. This feature allows the operator to have an added one hundred (100) preprogrammed cycle selections. These can be started by selecting the number and pressing the "ENTER/START" key.

4. Default Settings (Returns all the programmable parameters to the default settings).

Both the preprogrammed cycles and the system parameters (programs) have been preprogrammed by the factory with the parameters shown on **page 49** of this manual. The various program selections for the preprogrammed cycles and system parameters are outlined in **Section III** of this manual.

ALL program changes for the preprogrammed cycles and system parameters (programs) are done through the keypad selection keys on the front of the control panel.

ENTERING THE PROGRAMMING MODE:
First, make sure that no cycle is in progress and that the L.E.D. display reads "READY", then press the "CLEAR/STOP" Key and the UP ARROW key together. This will put you into the programming mode.

EXITING THE PROGRAMMING MODE:
The "CLEAR/STOP" key will return you to the previous menu level. Continue to press the "CLEAR/STOP" key until you are all the way out of the Programming Mode.

To alter the programming Parameters, the operator will locate the parameter (program) that is to be changed. If the change is a numerical one (i.e., time and/or temperature), the operator will simply enter the numerical value desired. If an error is made, press the "CLEAR/STOP" Key **ONCE**, and the incorrect entry that was made **will be cancelled**. Once the entry is made, and the parameter (program) set does not need to be changed, press the "ENTER/START" Key, and the Phase 7 OPL microprocessor controller (computer) will advance to the next program selected.

If the parameter (program) change is a feature change, such as changing the temperature conversion from degree Fahrenheit (ºF) to degree Celsius (ºC) or from "AUTO" (Automatic Drying Cycle - **Patent No. (4,827,627**) to" MANUAL" (Timed [Manual] Drying Cycle), the operator will press the "UP ARROW" or "DOWN ARROW" Key. This will toggle between choices. Once the entry is made, or if the parameter (program) does not need to be changed, press the "ENTER/START" Key, and the Phase 7 OPL microprocessor controller (computer) will advance to the next program selection.

When making numerical changes, please keep in mind to stay within the programming limits shown on **page 34 - page 38**. If an erroneous entry is made, the Phase 7 OPL microprocessor controller (computer) will display "ERROR" and ignore the entry made when the "ENTER/START" I Key is pressed and will return to the numerical value previously set.

The Phase 7 OPL microprocessor controller (computer) allows the operator to scroll through the various parameters (programs) and select the parameter to be changed. At this point, the operator can go to the next Program Location (system parameter) to be changed. If no other programs (parameters) need to be changed, the user can get out of the program mode by pressing the "CLEAR/STOP" O Key until it is out of the programming mode. The Phase 7 OPL microprocessor controller (computer) will be returned to the operating mode, and the L.E.D. display will read "READY".

B. PROGRAMMING FLOW CHARTS

The following section of this manual (**page 32 through page 46**) explains the programming of the preprogrammed cycles and Program Locations (system parameters) through the use of flow charts. A flow chart is nothing more than a diagram of the programming process.

Four (4) different symbols will be used in these flow charts:

a rectangle

a square

ENTER/START

CLEAR/STOP

Each rectangle will represent a read-out on the Phase 7 OPL microprocessor controller (computer) L.E.D. display, and each square will represent a key that is pressed. For example:

1. If the flow chart shows the symbol *READY* the Phase 7 OPL microprocessor controller (computer) L.E.D. display will read the same.

2. If the flow chart shows the symbol you will press that specific key on the keypad label.

3. This symbol represents "CLEAR/STOP".

4. This symbol represents "ENTER/START".

   a. The flow chart arrows (i.e., ⟶) represents the program path.

   b. On the sides of these flow charts are explanations of the flow chart procedure, and in some cases the programming limits.

Listed below, is an index of the flow charts on the following pages.

Flow Chart Titles

NOTE: To review the preset Program Locations, simply press the "ENTER/START" key followed by the letter location while the L.E.D. display reads "READY". To review a number location, simply follow the same process as a letter with the addition of the "ENTER/START" key being pressed again after the number is selected.

PHASE 7
MENU PROGRAMMING PROCEDURE

EVERY INDENTED STEP REPRESENTS THE "START/ENTER" KEY BEING PRESSED TO SELECT A MENU ITEM.
EVERY MESSAGE WITH A NUMBER BEFORE IT, INDICATES THAT IT IS A MENU SELECTION CHOICE.
EVERY MESSAGE WITHOUT A NUMBER BEFORE IT, INDICATES THAT IT IS THE LAST MENU LEVEL.

I.E. MENU FLOW

FROM **"1:SELECT SYSTEM PARAMETERS"**
PRESSING **"START/ENTER"** PUTS YOU AT **(0: DRYER SETUP)**
PRESSING **"DOWN ARROW"** PUTS YOU AT **(1: DISPLAY SETUP)**
PRESSING **"UP ARROW" PUTS YOU BACK AT (0: DRYER SETUP)**

PROGRAMMING MODE:
ENTERING;

MUST BE IN THE "READY" STATE.
PRESS "STOP/CLEAR" AND "UP ARROW" KEY TOGETHER.
(THIS WILL GET YOU INTO THE PROGRAMMING MODE.)

EXITING;

PRESSING THE "STOP/CLEAR" KEY REPEATEDLY UNTIL YOU ARE BACK TO THE "READY" DISPLAY.
THE "STOP/CLEAR" KEY WILL BRING YOU BACK ONE MENU LEVEL AT A TIME.
AT THE FIRST MENU LEVEL, IT WILL EXIT YOU FROM THE PROGRAMMING MODE AND RETURN TO THE "READY" STATE.

NOTES;

THE "UP ARROW" AND "DOWN ARROW" KEYS ARE USED TO SCROLL UP AND DOWN A MENU SELECTION.

THE NUMBER KEYS CAN ALSO BE USED TO BRING YOU DIRECTLY TO A KNOWN MENU ITEM.
PRESS THE NUMBER YOU WANT FOLLOWED BY THE "START/ENTER" KEY TO BRING YOU RIGHT TO THE MENU CHOICE ASSIGNED TO THE NUMBER SELECTED.

0: SELECT LANGUAGE
- ENGLISH
- FRANCAIS
- ESPANOL
- ITALIANO
- DEUTSCH

1: SELECT SYSTEM PARAMETERS

- 0: DRYER SETUP
  - 0: SELECT MODEL
    - GAS DOUBLE BURNER
    - GAS SINGLE BURNER
    - STEAM
  - 1: SYSTEM TEMP
    - DEG F
    - DEG C
  - 2: REVERSE MODE
    - SELECT REVERSE
    - ALWAYS REVERSE
  - 3: ENTER ‘A’ FACTOR 1 TO 9
    - A = 5 (5 = DEFAULT VALUE)
  - 4: ENTER ‘B’ FACTOR 1 TO 99
    - B = 78 (78 = DEFAULT VALUE)
  - 5: ENTER LINT COUNT 1 TO 5
    - 5 (5 = DEFAULT VALUE)
  - 6: ENTER AUDIO ALERT ON TIMES 0 TO 10
    - 5 (5 = DEFAULT VALUE)
- 1: DISPLAY SETUP
  - 0: SELECT SCROLL MODE
    - PIXEL
    - CHARACTER
  - 1:SELECT SCROLL TYPE
    - CONTINUOUS WITH PAUSE
    - CONTINUOUS
    - ONE TIME
  - 2: SELECT SCROLL SPEED 1 TO 20
    - 12 (12 = DEFAULT VALUE)
- 2: COOL DOWN SETUP
  - 0: ENTER COOL DOWN TIME 0 TO 99 MINUTES
    - 3 (3 = DEFAULT VALUE)
  - 1: ENTER COOL DOWN TEMP 70 TO 100 F
    - 100 F (100 F = DEFAULT VALUE)
  - 2: ENTER SPIN TIME 30 TO 120 SECONDS
    - 60 SEC (60 = DEFAULT VALUE)
  - 3: ENTER STOP TIME 7 TO 10 SECONDS
    - 7 SEC (7 = DEFAULT VALUE)

3: WRINKLE GUARD SETUP

0: WRINKLE GUARD AUDIO ALERT
AUDIO ALERT ON
AUDIO ALERT OFF

2: PROGRAM A - F CYCLE

SELECT A - F KEY
* (“*” DISPLAY THE LETTER CHOSEN. DEFAULTS TO “A”)
SELECT CYCLE TYPE
* (“*” DISPLAY THE CYCLE TYPE “AUTO” OR “MANUAL”)

<u>AUTO</u>

0: REVERSE MODE
ON
OFF
1: ENTER DRY TEMP 160 TO 200 F
*** F (“***” = THE DEFAULT DRY TEMP FOR THAT CYCLE)
2: ENTER DRY LEVEL 90 TO 100 %
*** % (“***” = THE DEFAULT DRY LEVEL FOR THAT CYCLE)
3: ENTER COOL DOWN TIME 0 TO 99 MINUTES
** MIN (“***” = THE DEFAULT TIME FOR THAT CYCLE)
4: ENTER COOL DOWN TEMP 70 TO 100 F
*** F (“***” = THE DEFAULT TEMP FOR THAT CYCLE)
5: ENTER ‘A’ FACTOR 1 TO 9
A = 5 (5 = DEFAULT VALUE)
6: ENTER ‘B’ FACTOR 1 TO 99
B = 78 (78 = DEFAULT VALUE)

<u>MANUAL</u>

0: REVERSE MODE
ON
OFF
1: ENTER DRY TIME 0 TO 99 MINUTES
** MIN (“**” = THE DEFAULT MINUTES FOR THAT CYCLE)
2: ENTER DRY TEMP 100 TO 200 F
*** F (“***” = THE DEFAULT DRY TEMP FOR THAT CYCLE)
3: ENTER COOL DOWN TIME 0 TO 99 MINUTES
** MIN (“**” = THE DEFAULT TIME FOR THAT CYCLE)
4: ENTER COOL DOWN TEMP 70 TO 100 F
*** F (“***” = THE DEFAULT TEMP FOR THAT CYCLE)
5: ENTER SPIN TIME 30 TO 120 SECONDS
*** SEC (“***” = THE DEFAULT TIME FOR THAT CYCLE)
6: ENTER STOP TIME 7 TO 10 SECONDS
*** SEC (“***” = THE DEFAULT TIME FOR THAT CYCLE)

3: PROGRAM 0 - 99 CYCLE

SELECT 0 - 99 CYCLE
** ("**" DISPLAY THE NUMBER CHOSEN. DEFAULTS TO "0")
SELECT CYCLE TYPE
* ("*" DISPLAY THE CYCLE TYPE "AUTO" OR "MANUAL")

AUTO

0: REVERSE MODE
ON
OFF
1: ENTER DRY TEMP 160 TO 200 F
*** F ("***" = THE DEFAULT DRY TEMP FOR THAT CYCLE)
2: ENTER DRY LEVEL 90 TO 100 %
*** % ("***" = THE DEFAULT DRY LEVEL FOR THAT CYCLE)
3: ENTER COOL DOWN TIME 0 TO 99 MINUTES
** MIN ("***" = THE DEFAULT TIME FOR THAT CYCLE)
4: ENTER COOL DOWN TEMP 70 TO 100 F
*** F ("***" = THE DEFAULT TEMP FOR THAT CYCLE)
5: ENTER 'A' FACTOR 1 TO 9
A = 5 (5 = DEFAULT VALUE)
6: ENTER 'B' FACTOR 1 TO 99
B = 78 (78 = DEFAULT VALUE)

MANUAL

0: REVERSE MODE
ON
OFF
1: ENTER DRY TIME 0 TO 99 MINUTES
** MIN ("**" = THE DEFAULT MINUTES FOR THAT CYCLE)
2: ENTER DRY TEMP 100 TO 200 F
*** F ("***" = THE DEFAULT DRY TEMP FOR THAT CYCLE)
3: ENTER COOL DOWN TIME 0 TO 99 MINUTES
** MIN ("**" = THE DEFAULT TIME FOR THAT CYCLE)
4: ENTER COOL DOWN TEMP 70 TO 100 F
*** F ("***" = THE DEFAULT TEMP FOR THAT CYCLE)
5: ENTER SPIN TIME 30 TO 120 SECONDS
*** SEC ("***" = THE DEFAULT TIME FOR THAT CYCLE)
6: ENTER STOP TIME 7 TO 10 SECONDS
*** SEC ("***" = THE DEFAULT TIME FOR THAT CYCLE)

4: DEFAULT SETTINGS

ENTER PASSWORD

(PRESS “1” “2” “3”)

CONFIRM DEFAULTS

NO (DEFAULT VALUE)

YES

NOTE: “NO” WILL RETURN YOU BACK TO “4: DEFAULT SETTINGS”

“YES” WILL SET ALL THE PARAMETERS TO THE DEFAULT SETTINGS.

DISPLAY WILL READ “DEFAULTS SET” AND RETURN TO

“4: DEFAULT SETTINGS”

ONE TIME MANUAL CYCLE:

FROM “READY” STATE
(PRESS “MAN” KEY)

ENTER DRY TIME 0 TO 99 MINUTES
0 MIN (0 = DEFAULT VALUE)

ENTER DRY TEMP 100 TO 200 F
100 F (100 = DEFAULT VALUE)

ENTER COOL DOWN TIME 0 TO 99 MINUTES
3 MIN (3 = DEFAULT VALUE)

SELECT REVERSE MODE
ON
OFF

PRESS START

ONE TIME AUTO CYCLE

FROM “READY” STATE
(PRESS “AUTO” KEY)

ENTER DRY TEMP 160 TO 200 F
160 F (160 = DEFAULT VALUE)

ENTER DRY LEVEL 90 TO 100 %
100 % (100 = DEFAULT VALUE)

SELECT REVERSE MODE
ON
OFF

PRESS START

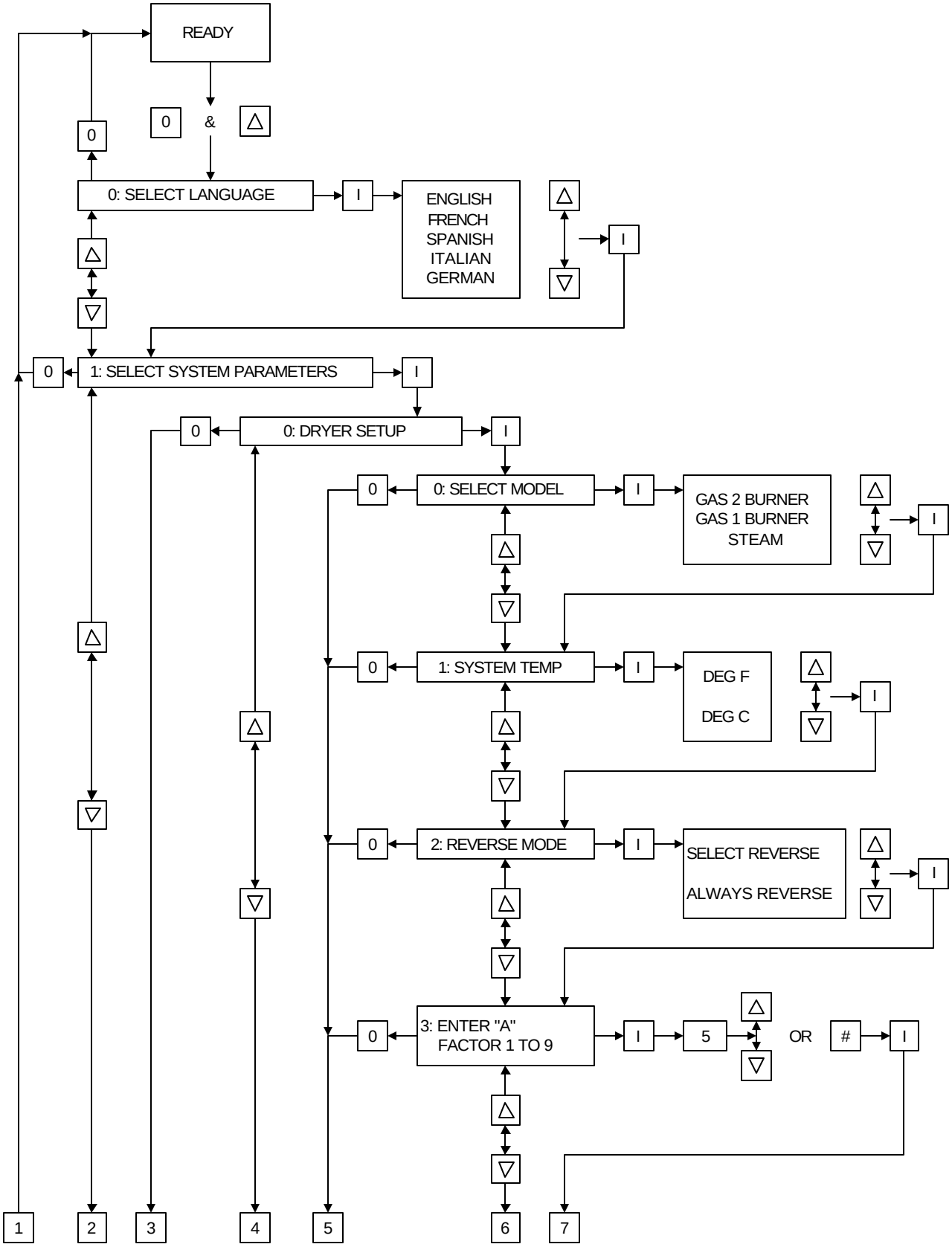
READY
0
&
△
0
0: SELECT LANGUAGE
I
ENGLISH
FRENCH
SPANISH
ITALIAN
GERMAN
△
▽
I
△
▽
0
1: SELECT SYSTEM PARAMETERS
I
0
0: DRYER SETUP
I
0
0: SELECT MODEL
I
GAS 2 BURNER
GAS 1 BURNER
STEAM
△
▽
I
△
▽
△
0
1: SYSTEM TEMP
I
DEG F
DEG C
△
▽
I
△
▽
△
▽
0
2: REVERSE MODE
I
SELECT REVERSE
ALWAYS REVERSE
△
▽
I
△
▽
▽
0
3: ENTER "A"
FACTOR 1 TO 9
I
5
△
▽
OR
#
I
△
▽
1
2
3
4
5
6
7

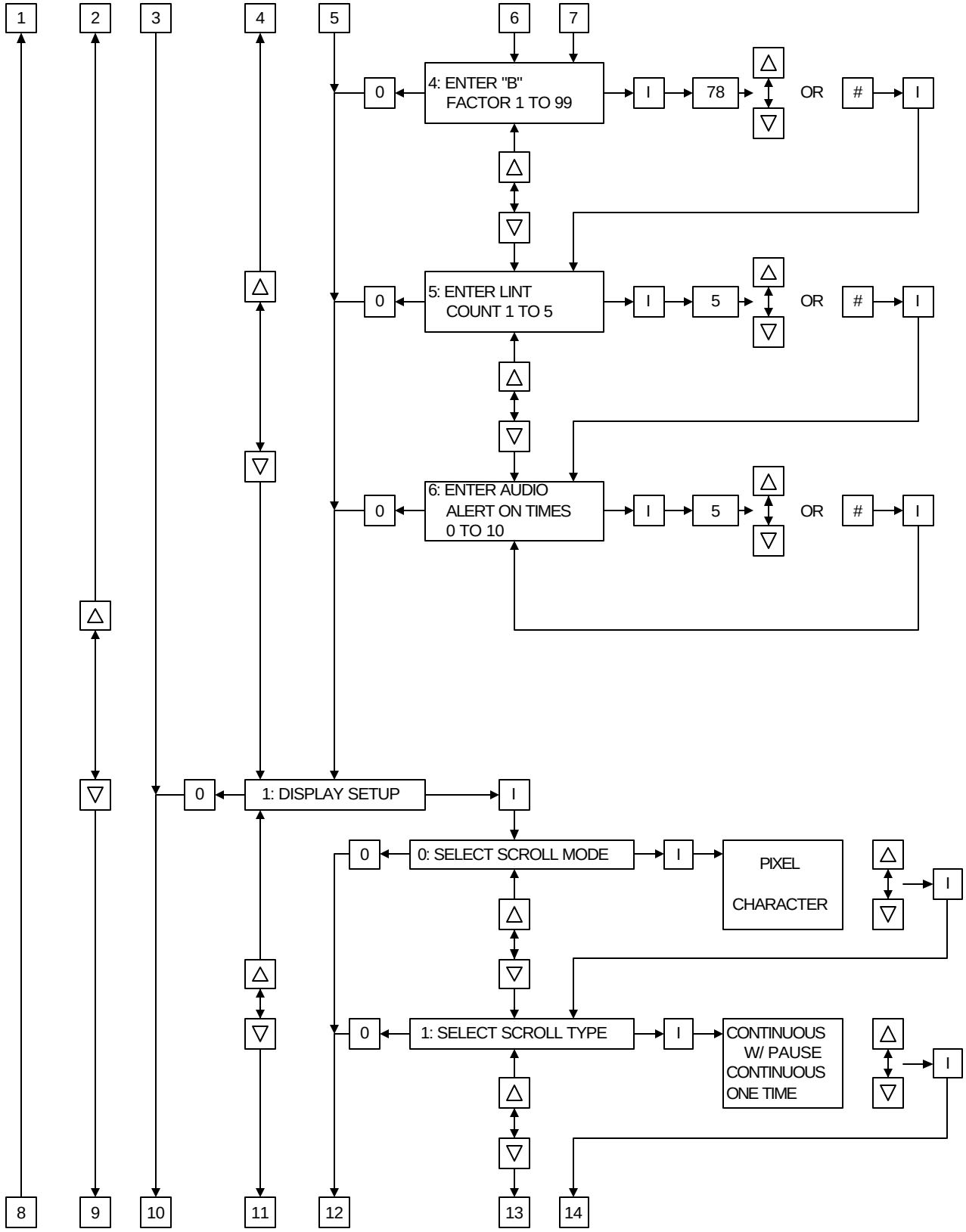
1
2
3
4
5
6
7
0
4: ENTER "B"
FACTOR 1 TO 99
I
78
OR
#
I
5: ENTER LINT
COUNT 1 TO 5
5
6: ENTER AUDIO
ALERT ON TIMES
0 TO 10
1: DISPLAY SETUP
0: SELECT SCROLL MODE
PIXEL
CHARACTER
1: SELECT SCROLL TYPE
CONTINUOUS
W/ PAUSE
CONTINUOUS
ONE TIME
8
9
10
11
12
13
14

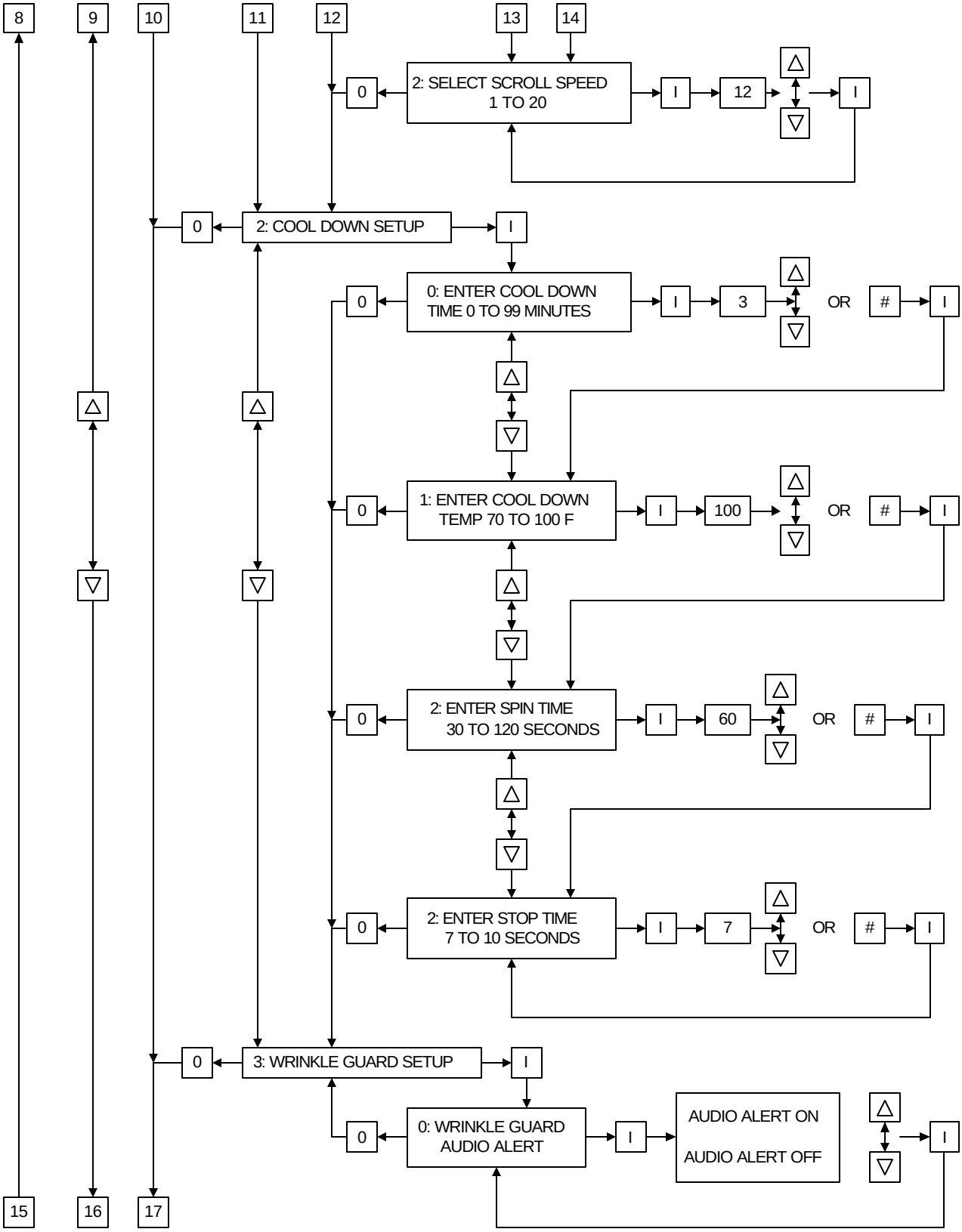
8
9
10
11
12
13
14
2: SELECT SCROLL SPEED
1 TO 20
0
I
12
I
2: COOL DOWN SETUP
0: ENTER COOL DOWN
TIME 0 TO 99 MINUTES
3
OR
#
1: ENTER COOL DOWN
TEMP 70 TO 100 F
100
2: ENTER SPIN TIME
30 TO 120 SECONDS
60
2: ENTER STOP TIME
7 TO 10 SECONDS
7
3: WRINKLE GUARD SETUP
0: WRINKLE GUARD
AUDIO ALERT
AUDIO ALERT ON
AUDIO ALERT OFF
15
16
17

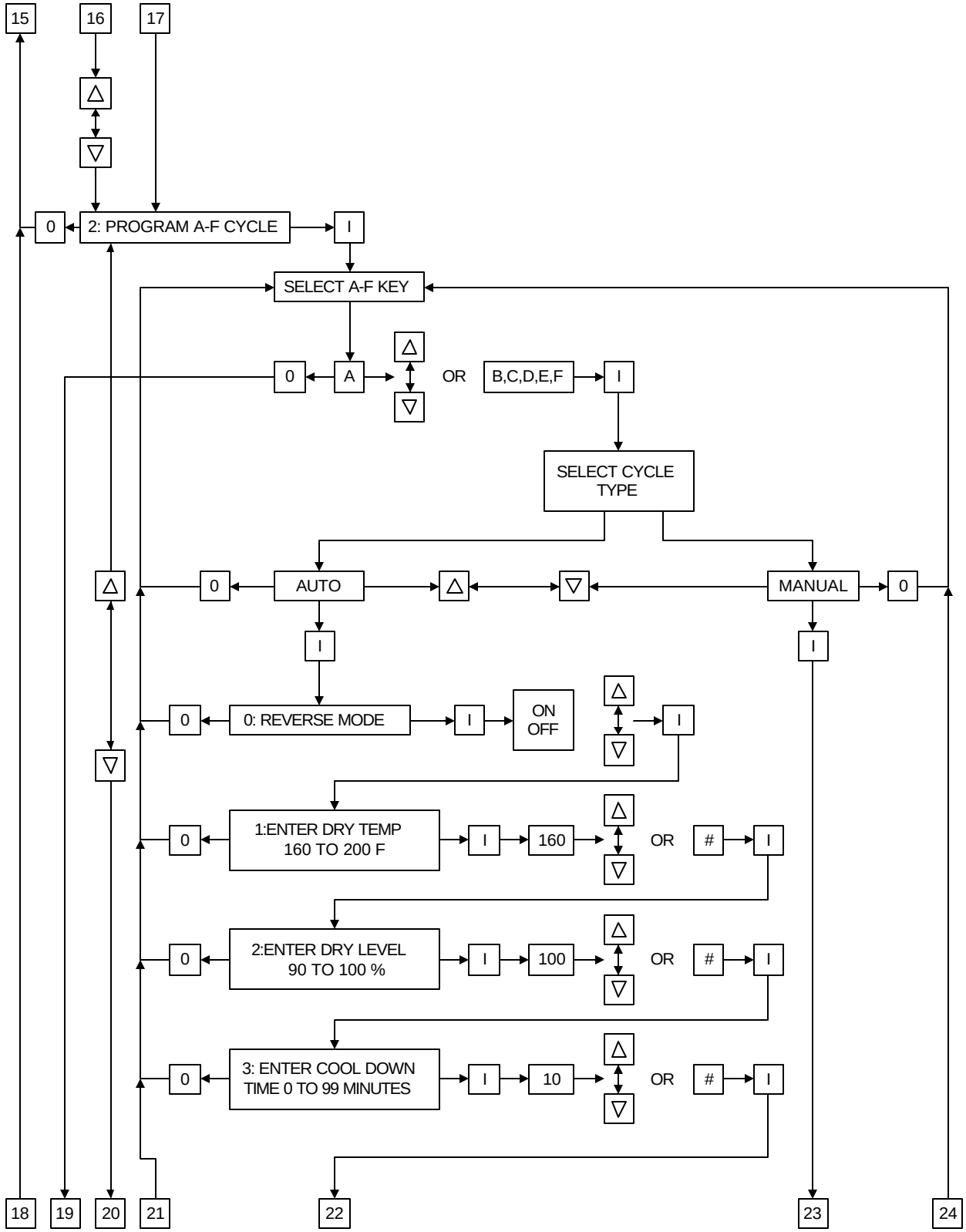
15
16
17
0
2: PROGRAM A-F CYCLE
I
SELECT A-F KEY
0
A
OR
B,C,D,E,F
I
SELECT CYCLE TYPE
0
AUTO
MANUAL
0
I
I
0
0: REVERSE MODE
I
ON OFF
I
0
1:ENTER DRY TEMP 160 TO 200 F
I
160
OR
#
I
0
2:ENTER DRY LEVEL 90 TO 100 %
I
100
OR
#
I
0
3: ENTER COOL DOWN TIME 0 TO 99 MINUTES
I
10
OR
#
I
18
19
20
21
22
23
24

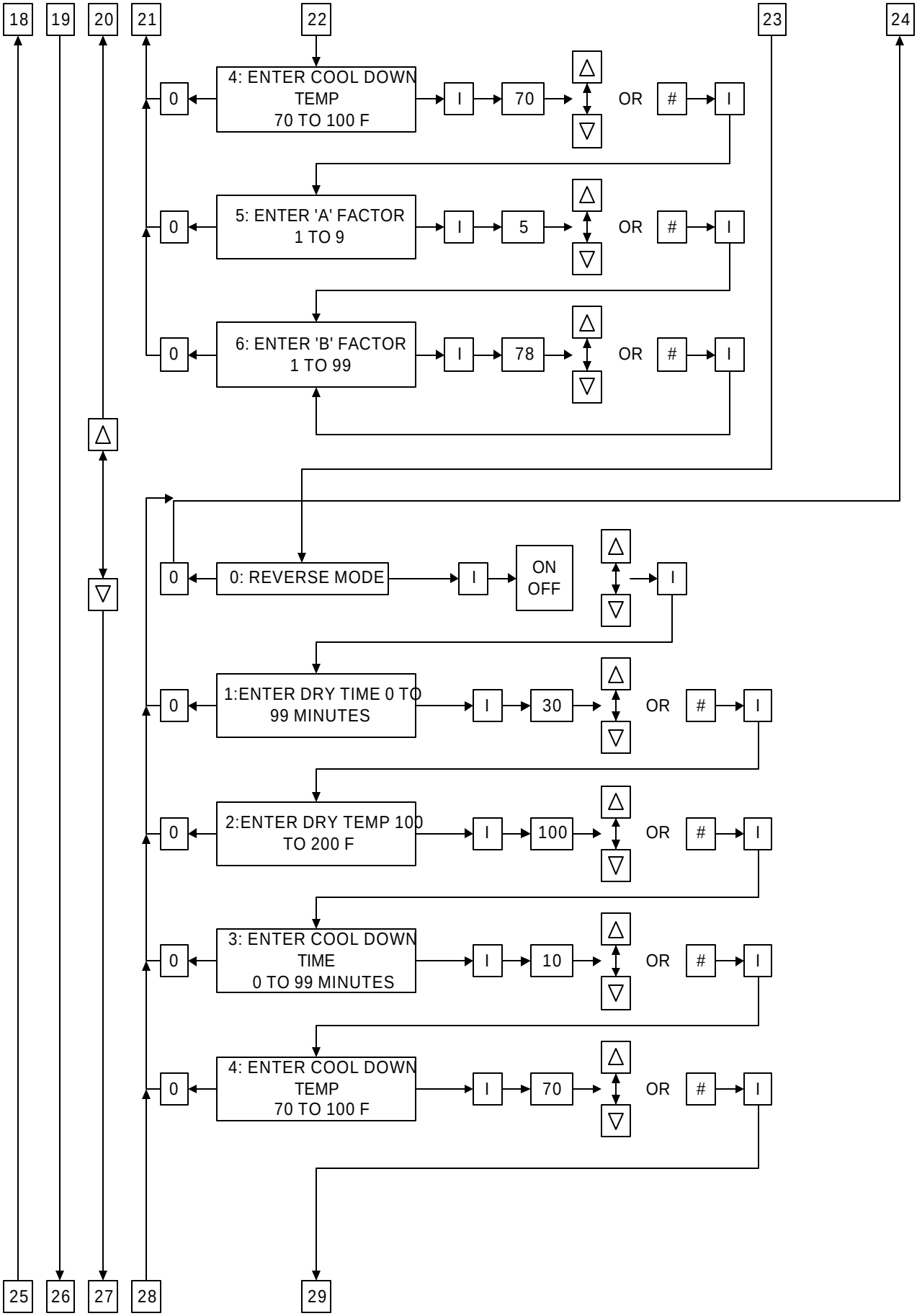
18
19
20
21
22
23
24
4: ENTER COOL DOWN TEMP 70 TO 100 F
0
I
70
OR
#
I
5: ENTER 'A' FACTOR 1 TO 9
5
6: ENTER 'B' FACTOR 1 TO 99
78
0: REVERSE MODE
ON OFF
1:ENTER DRY TIME 0 TO 99 MINUTES
30
2:ENTER DRY TEMP 100 TO 200 F
100
3: ENTER COOL DOWN TIME 0 TO 99 MINUTES
10
25
26
27
28
29

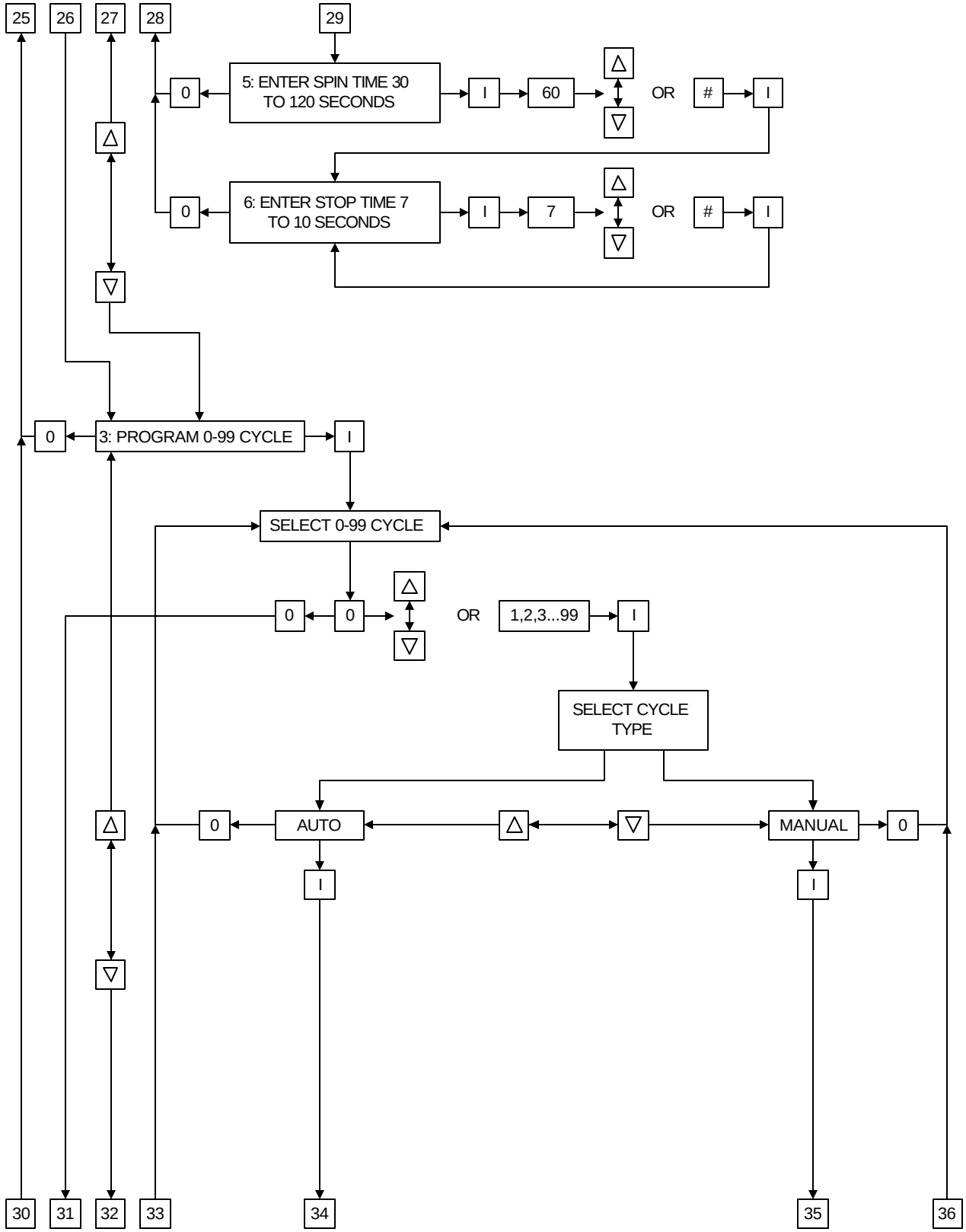
25
26
27
28
29
5: ENTER SPIN TIME 30 TO 120 SECONDS
0
I
60
OR
#
I
6: ENTER STOP TIME 7 TO 10 SECONDS
0
I
7
OR
#
I
0
3: PROGRAM 0-99 CYCLE
I
SELECT 0-99 CYCLE
0
0
OR
1,2,3...99
I
SELECT CYCLE TYPE
0
AUTO
MANUAL
0
I
I
30
31
32
33
34
35
36

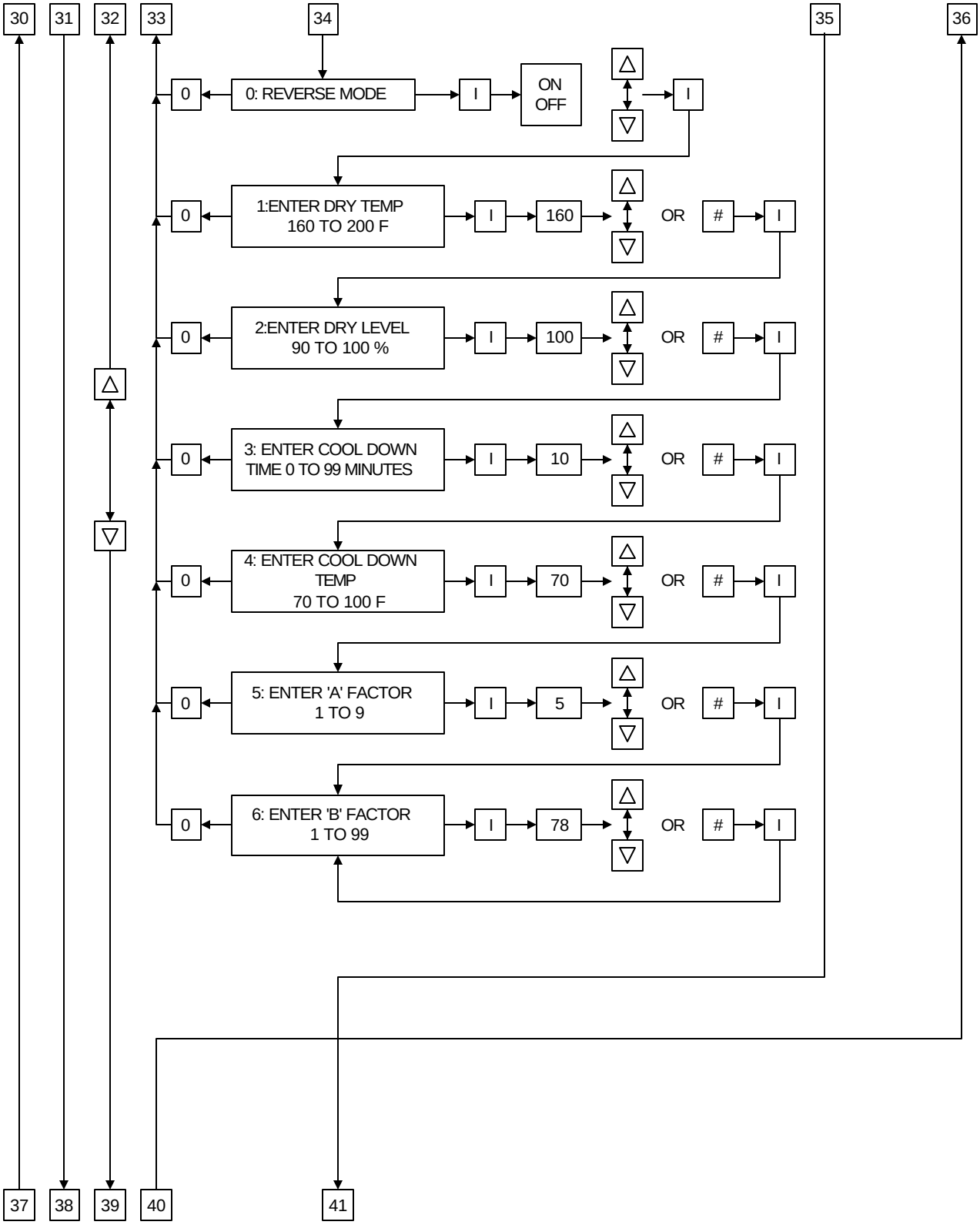
30
31
32
33
34
35
36
0
0: REVERSE MODE
I
ON
OFF
I
1:ENTER DRY TEMP
160 TO 200 F
160
OR
#
2:ENTER DRY LEVEL
90 TO 100 %
100
3: ENTER COOL DOWN
TIME 0 TO 99 MINUTES
10
4: ENTER COOL DOWN
TEMP
70 TO 100 F
70
5: ENTER 'A' FACTOR
1 TO 9
5
6: ENTER 'B' FACTOR
1 TO 99
78
37
38
39
40
41

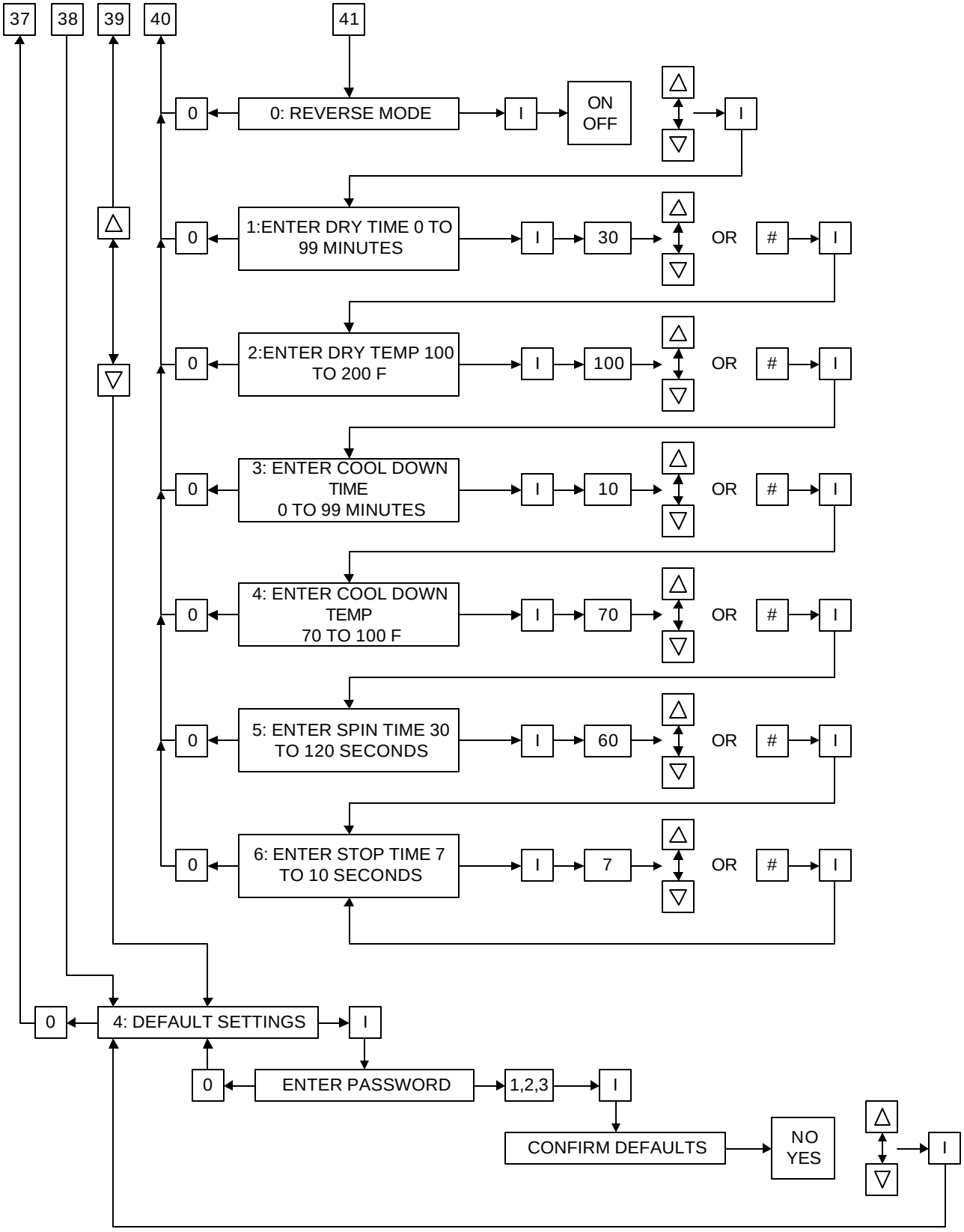
37
38
39
40
41
0
0: REVERSE MODE
I
ON
OFF
I
0
1:ENTER DRY TIME 0 TO 99 MINUTES
I
30
OR
#
I
0
2:ENTER DRY TEMP 100 TO 200 F
I
100
OR
#
I
0
3: ENTER COOL DOWN TIME 0 TO 99 MINUTES
I
10
OR
#
I
0
4: ENTER COOL DOWN TEMP 70 TO 100 F
I
70
OR
#
I
0
5: ENTER SPIN TIME 30 TO 120 SECONDS
I
60
OR
#
I
0
6: ENTER STOP TIME 7 TO 10 SECONDS
I
7
OR
#
I
0
4: DEFAULT SETTINGS
I
0
ENTER PASSWORD
1,2,3
I
CONFIRM DEFAULTS
NO
YES
I

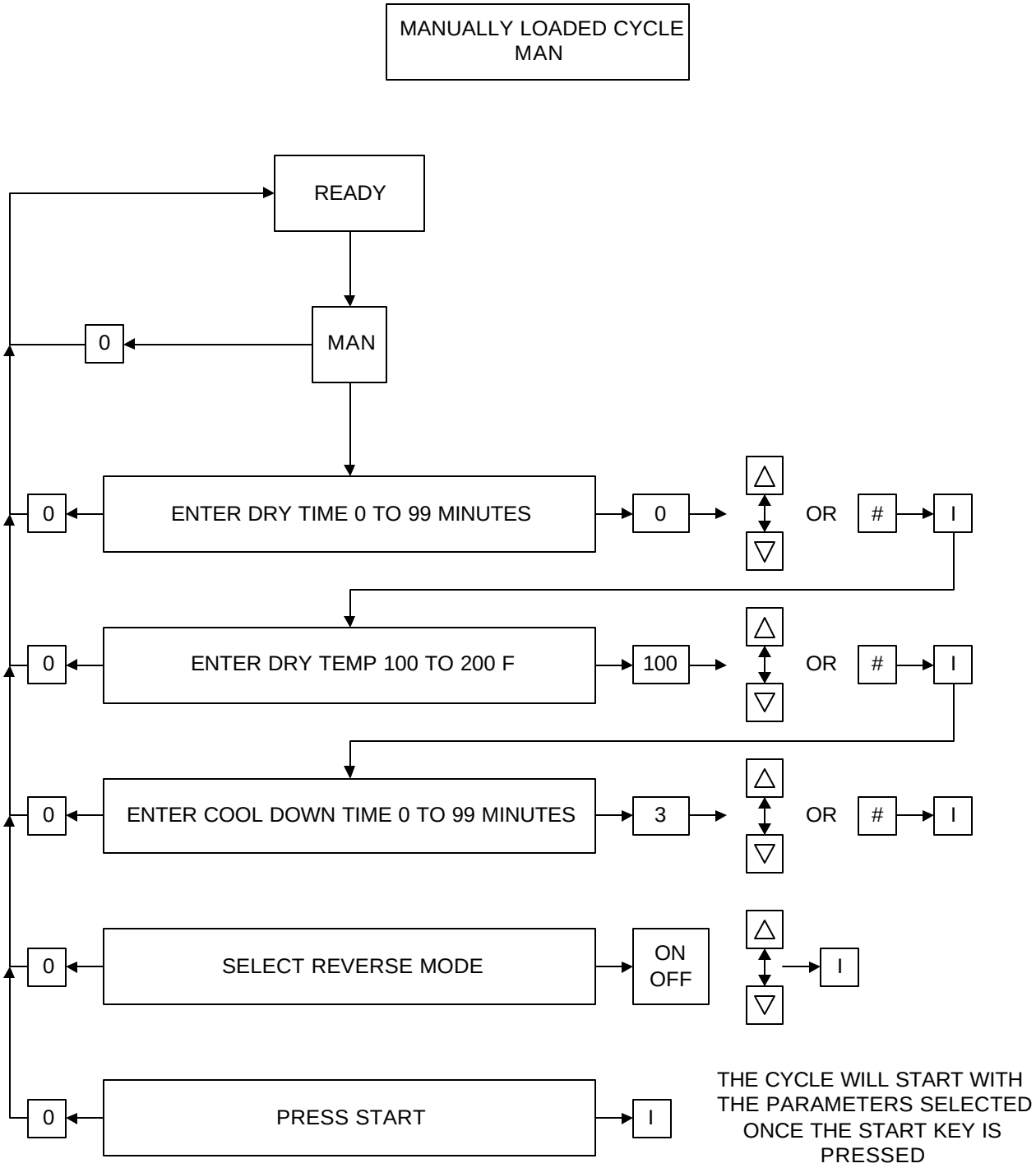
MANUALLY LOADED CYCLE
MAN
READY
MAN
0
0
ENTER DRY TIME 0 TO 99 MINUTES
0
OR
#
I
0
ENTER DRY TEMP 100 TO 200 F
100
OR
#
I
0
ENTER COOL DOWN TIME 0 TO 99 MINUTES
3
OR
#
I
0
SELECT REVERSE MODE
ON
OFF
I
0
PRESS START
I
THE CYCLE WILL START WITH
THE PARAMETERS SELECTED
ONCE THE START KEY IS
PRESSED

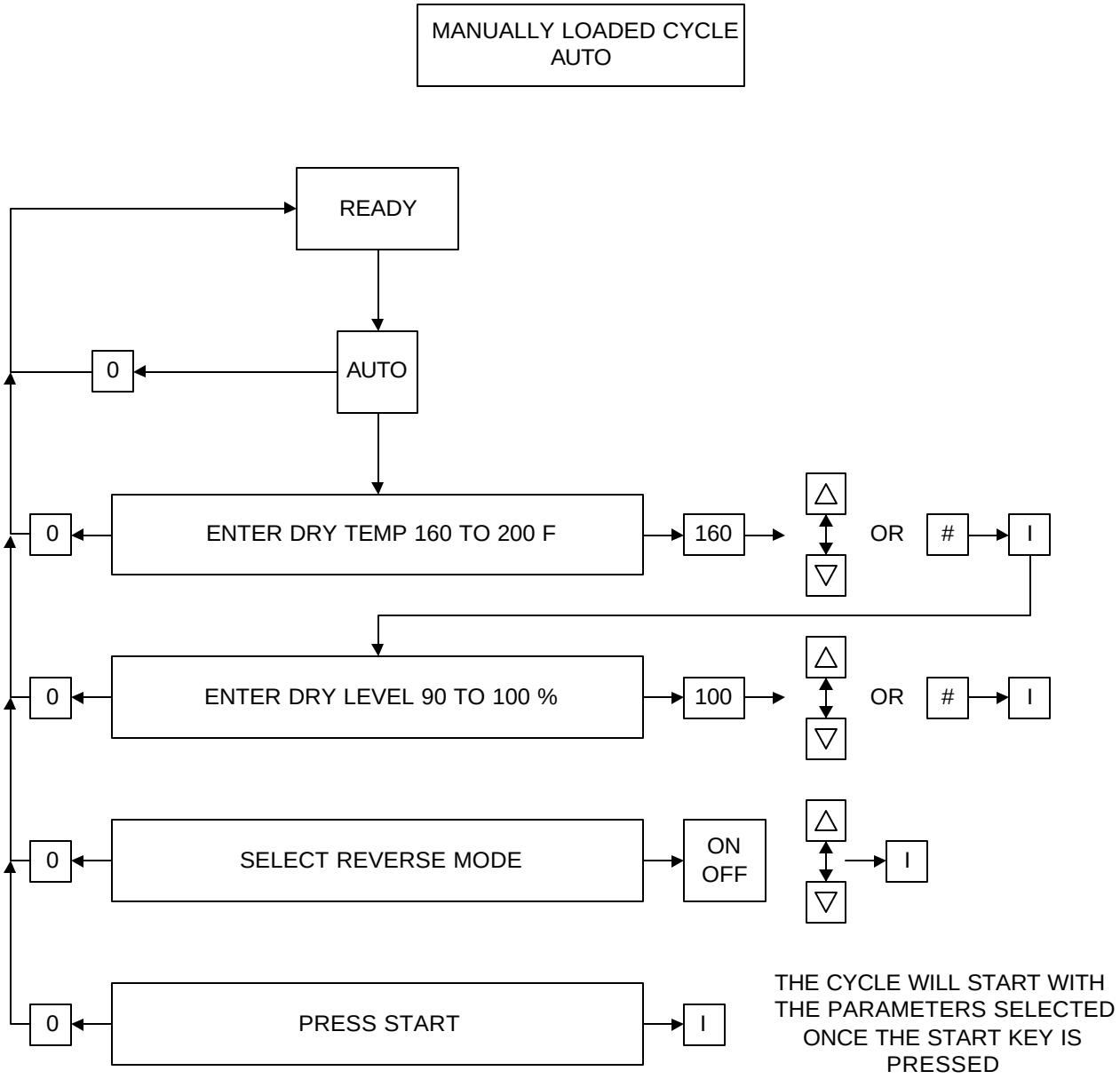
MANUALLY LOADED CYCLE
AUTO
READY
AUTO
0
ENTER DRY TEMP 160 TO 200 F
160
OR
#
I
ENTER DRY LEVEL 90 TO 100 %
100
OR
#
I
SELECT REVERSE MODE
ON
OFF
I
PRESS START
I
THE CYCLE WILL START WITH THE PARAMETERS SELECTED ONCE THE START KEY IS PRESSED

SECTION VII

FACTORY PRESET PARAMETERS / PROGRAMS

A. CYCLE A - F PARAMETERS (Programs) PRESET BY FACTORY

CYCLE A:
Automatic Mode, Reverse, Dry Temperature 180ºF, Dryness Level 100%, Cool Down Time 6 minutes, Cool Down Temperature 80ºF, A Factor 5, B Factor 78.

CYCLE B:
Automatic Mode, Reverse, Dry Temperature 180ºF, Dryness Level 98% Cool Down Time 6 minutes, Cool Down Temperature 80ºF, A Factor 5, B Factor 78.

CYCLE C:
Automatic Mode, Reverse, Dry Temperature 160ºF, Dryness Level 98%, Cool Down Time 4 minutes, Cool Down Temperature 80ºF, A Factor 5, B Factor 78.

CYCLE D:
Manual (Timed) Mode, Reverse, Dry Time 40 minutes, Dry Temperature 190ºF, Cool Down Time 6 minutes, Cool Down Temperature 80ºF, Spin Time 60 seconds, Stop (Dwell) Time 7 seconds.

CYCLE E:
Manual (Timed) Mode, Reverse, Dry Time 30 minutes, Dry Temperature 180ºF, Cool Down Time 4 minutes, Cool Down Temperature 80ºF, Spin Time 60 seconds, Stop (Dwell) Time 7 seconds.

CYCLE F:
Manual (Timed) Mode, Reverse, Dry Time 10 minutes, Dry Temperature 170ºF, Cool Down Time 2 minutes, Cool Down Temperature 80ºF, Spin Time 60 seconds, Stop (Dwell) Time 7 seconds.

B. CYCLE 0 - 99 PARAMETERS (PROGRAMS) PRESET BY THE FACTORY

CYCLE 0 - 99:
Manual (Timed) Mode, Reverse, Dry Time = 0, Dry Temp = 100, Cool Down Time = 3 Minutes, Cool Down Temp = 100, Spin Time = 60, Stop Time = 7.

SECTION VIII

PHASE 7 OPL PROGRAMMING LIMITS

A. PREPROGRAMMED CYCLES

1. Automatic Cycle (Mode) (**Patent No. 4,827,627**)

    a. Drying Temperature from 160ºF to 200ºF in one-degree increments.
    b. Dryness Level (percentage of dryness from 90% to 100% in one-percent increments.
    c. Cool Down Time from 0 to 99 minutes in one-minute increments.
    d. Cool Down Temperature from 70ºF to 100ºF in one-degree increments.

2. Timed (Manual) Drying Cycle (Mode)

    a. Drying Temperature from 100ºF to 200ºF in one-degree increments.
    b. Drying Time from 0 to 99 minutes in one-minute increments.
    c. Cool Down Time from 0 to 99 minutes in one-minute increments for preprogrammed cycle.
    d. Cool Down Temperature from 70ºF to 100ºF in one-degree increments.
    e. Reversing Models

        1) Automatic Cycle (**Patent No. 4,827,627**) Spin time and Stop time *is not* programmable. Refer to **Fixed Parameters** on **part C.**

        2) Timed Cycle

            a) Spin Time ("**SPIN TIME**") from 30 seconds to 120 seconds in one-second increments.
            b) Stop (Dwell) Time ("**STOP TIME**") from 7 seconds to 10 seconds in one-second increments.

B. SYSTEM PARAMETERS (Program Locations)

1. **Factor "A"** (Slope) from 1 to 9 in increments of one (1).
2. **Factor "B"** (Heat Loss - Offset) from 1 to 99 in increments of one (1).
3. Manual Selection Auto Mode ("COOL DOWN TIME") from 0 to 99 minutes in one-minute increments.
4. Audio Alert 0-10.
5. Lint Count 1-5.

C. FIXED PARAMETERS

1. Spin Time ("**SPIN TIME**") is fixed at 2-1/2 minutes in forward and 2 minutes in reverse.

2. Stop (Dwell) Time ("**STOP TIME**") is fixed at 7 seconds (in the Auto Mode) and is not adjustable.

SECTION IX

PHASE 7 AUTO CYCLE (Patent No. 4,827,627)

"A" and "B" Factor Parameters

GAS SINGLE BURNER		
MODEL	**"A"**	**"B"**
ADG-200	5	78

STEAM		
MODEL	**"A"**	**"B"**
ADS-200	5	72
ADS-310	5	72
ADS-410	5	65

GAS DOUBLE BURNER		
MODEL	**"A"**	**"B"**
ADG-310	5	78
ADG-410	5	65

IMPORTANT: If your particular model / dryer A & B factor is not shown in above chart, contact the **ADC** Service Department for the appropriate factors for your particular dryer. When doing so, please have the dryer model and serial number available.

NOTE: For letter and symbol designations refer to the following page (**page 52**).

IMPORTANT: The "A" and "B" Factors have been preprogrammed by the factory, but can be changed in the field. If the Phase 7 OPL microprocessor controller (computer) should fail and is being replaced. **THE REPLACEMENT PHASE 7 OPL MICROPROCESSOR CONTROLLER (COMPUTER) MUST BE REPROGRAMMED FOR THE SPECIFIC MODEL SHOWN IN THE "A" and "B" FACTOR PARAMETERS CHART ON THE PREVIOUS PAGE (page 51). The "A" "B" FACTOR LABEL IS LOCATED IN THE TOP CONTROL PANEL, BEHIND THE PHASE 7 KEYPAD-DISPLAY DOOR.**

NOTE: For fine tuning the Auto Cycle for certain loads. If cloths come out wet, then ***decrease*** the "B" Factor, if cloths come out too dry, ***increse*** the "B" Factor.

SECTION X

PHASE 7 OPL SYSTEM DIAGNOSTICS

IMPORTANT:	You must disconnect and lock out Electric, Gas, or Steam supply before any covers or guards are removed from the machine to allow access for cleaning, adjusting, installation, or testing of any equipment per OSHA (Occupational Safety and Health Administration) standards.

ALL major circuits, including door, microprocessor temperature sensor, heat and motor circuits are monitored. The Phase 7 OPL microprocessor controller (computer) will inform the user, via the L.E.D. display of certain failure messages, along with L.E.D. indicators on the I/O board on the back panel of the front right control door.

A. DIAGNOSTIC (L.E.D. Display) FAULT MESSAGES

CALL FOR SERVICE - Indicates a Board Failure.

FRONT DOOR NOT CLOSED - A Front Door is open when it should be closed.

REAR DOOR NOT CLOSED - A Rear Door is open when it should be closed.

CHECK CONTROL POWER - Indicates Control Power is Off.

EXHAUST HIGH TEMP FAULT - Indicates the temperature in the Tumbler is above 225°F.

LINT DRAWER OPEN - Indicates the Lint Drawer is open and needs to be closed.

DRY ENABLE FAULT - Indicates the machine is not level and all doors closed. Not ready to start drying.

FRONT NOT DOWN - Machine is tilted back.

REAR NOT DOWN - Machine is tilted forward.

TUMBLER OVER LOAD FAULT - Indicates the Tumbler over load has tripped open.

FAN OVER LOAD FAULT - Indicates the Fan over load has tripped open.

EXHAUST HIGH LIMIT FAULT - Indicates the temperature disk in the exhaust has opened.

FRONT SAIL SWITCH CLOSED FAULT - Front Sail Switch is closed and should be open.

FRONT SAIL SWITCH OPEN FAULT - Front Sail Switch is open and should be closed.

REAR SAIL SWITCH CLOSED FAULT - Rear Sail Switch is closed and should be open.

REAR SAIL SWITCH OPEN FAULT - Rear Sail Switch is open and should be closed.

FAN CONTACTOR FAULT - The Fan Contactor was not pulled in.

FRONT BURNER HIGH LIMIT FAULT - Indicates the temperature disk in the Front Burner has opened.

REAR BURNER HIGH LIMIT FAULT - Indicates the temperature disk in the Rear Burner has opened.

FRONT BURNER VALVE FAULT - Indicates Front Gas Valve is not working or no gas is turned on or flame out.

REAR BURNER VALVE FAULT - Indicates Rear Gas Valve is not working or no gas is turned on or flame out.

FRONT BURNER IGNITION CONTROL FAULT - Front ignition module is not working or failure to ignite.

REAR BURNER IGNITION CONTROL FAULT - Rear ignition module is not working or failure to ignite.

ROTATION FAULT - Indicates the Tumbler is not rotating.

BAD PROBE - Indicates the temperature probe is open or shorted.

LOW VOLTAGE FAULT - Indicates power has dropped below the operating values and will shut down.

B. I/O BOARD INPUTS AND OUTPUT L.E.D. INDICATORS

INPUTS: (RED)

1. FDRC - Front Door Closed
2. FDRO - Front Door Open
3. TBOL - Tumbler Overload
4. FNOL - Fan Overload
5. RDWN - Rear Down
6. FDWN - Front Down
7. RDRC - Rear Door Closed
8. RDRO - Rear Door Open
9. FAN - Blower Fan On
10. RBHL - Rear Burner High Limit
11. R_SS - Rear Sail Switch
12. FBHL - Front Burner High Limit
13. F_SS - Front Sail Switch
14. EXHL - Exhaust High Limit
15. DRY - Dry Enable Bit
16. LINT - Lint Drawer
17. 24VM - Control Voltage at Spare Inputs
18. FVLV - Front Gas Valve
19. RVLV - Rear Gas Valve
20. SPR1 - Spare #1
21. SPR2 - Spare #2
22. SPR3 - Spare #3
23. SPR4 - Spare #4
24. SPR5 - Spare #5
25. +24 - Fuse #2 Board 24 Volt AC
26. 24IN - Board 24 Volt AC
27. MCR+ - Control Voltage 24 Volts AC

OUTPUTS: (GREEN)

1. R_HEAT - Rear Heat
2. ALERT - Audio Alert Horn
3. FWD - Tumbler Forward
4. REV - Tumbler Reverse
5. AIR JET - Air Jet On
6. FAN - Blower Fan On
7. F_HEAT - Front Heat
8. AUX - Auxilary Relay
9. PRG1 - Programmable Output #1
10. PRG2 - Programmable Output #2
11. PRG3 - Programmable Output #3
12. PRG4 - Programmable Output #4
13. OCL1 - Open Collector #1
14. OCL2 - Open Collector #2
15. OCL3 - Open Collector #3
16. OCL4 - Open Collector #4
17. OCL5 - Open Collector #5
18. OCL6 - Open Collector #6
19. OCL7 - Open Collector #7
20. OCL8 - Open Collector #8
21. EOC - End Of Cycle Light

INPUTS:

1. FDRC – (RED LED) This LED will indicate the status of the Front Doors. If the doors are Closed, then the LED is ON.

2. FDRO – (RED LED) This LED will indicate the status of the Front Doors. If the doors are Open, then the LED is ON.

3. TBOL – (RED LED) This LED will indicate the status of the Tumbler Overload Contact. If the Contact is closed, then the LED is ON. If it faults open, then the LED is OFF.

4. FNOL – (RED LED) This LED will indicate the status of the Fan Overload Contact. If the Contact is closed, then the LED is ON. If it faults open, then the LED is OFF.

5. RDWN – (RED LED) This LED will indicate the status of the Rear Tilt. If the rear of the dryer is down, then the LED is ON.

6. FDWN – (RED LED) This LED will indicate the status of the Front Tilt. If the front of the dryer is down, then the LED is ON.

7. RDRC – (RED LED) This LED will indicate the status of the Rear Doors. If the doors are Closed, then the LED is ON.

8. RDRO – (RED LED) This LED will indicate the status of the Rear Doors. If the doors are Open, then the LED is ON.

9. FAN – (RED LED) This LED will indicate the status of the Blower Fan. If the fan is on, Then the LED is ON.

10. RBHL – (RED LED) This LED will indicate the status of the Rear Burner High Limit Disk. If the disk is closed (Temp below 330 F), Then the LED is ON.

11. R_SS – (RED LED) This LED will indicate the status of the Rear Sail Switch. If the switch is closed, Then the LED is ON.

12. FBHL – (RED LED) This LED will indicate the status of the Front Burner High Limit Disk. If the disk is closed (Temperature below 330 F), Then the LED is ON.

13. F_SS – (RED LED) This LED will indicate the status of the Front Sail Switch. If the switch is closed, Then the LED is ON.

14. EXHL – (RED LED) This LED will indicate the status of the Exhaust High Limit Disk. If the disk is closed (Temperature below 225 F), Then the LED is ON.

15. DRY – (RED LED) This LED will indicate the status of the PLC. If the mechanical Functions of the dryer have been set to the DRY position, the PLC will Send a signal to the Phase 7 board. This signal will indicate that All the Doors are closed and the dryer is level. When these conditions are met, then the LED is ON.

16. LINT – (RED LED) This LED will indicate the status of the Lint Drawer. If the drawer is Closed, then the LED is ON.

17.	24VM – (RED LED)	Control voltage at the spare inputs.
18.	FVLV – (RED LED)	This LED will indicate the status of the Front Gas Valve. If the Front Gas Valve is Open (ON), then the LED is ON.
19.	RVLV – (RED LED)	This LED will indicate the status of the Rear Gas Valve. If the Rear Gas Valve is Open (ON), then the LED is ON.
20.	SPR1 – (RED LED)	This is for a spare input to be used with programmable outputs.
21.	SPR2 – (RED LED)	This is for a spare input to be used with programmable outputs.
22.	SPR3 – (RED LED)	This is for a spare input to be used with programmable outputs.
23.	SPR4 – (RED LED)	This is for a spare input to be used with programmable outputs.
24.	SPR5 – (RED LED)	This is for a spare input to be used with programmable outputs.
25.	+24 – (RED LED)	This LED will indicate the board voltage that is protected by Fuse #2.
26.	24IN – (RED LED)	This LED will indicate 24 VAC to the board.
27.	MCR+ - (RED LED)	This LED will indicate the status of the Control Voltage. If the Power On button is pressed (Green Button Light is On), then the LED is On.

OUTPUTS:

1. R_HEAT – (GREEN LED) This LED will indicate the status of the Rear Heat output. If the request to turn on the Rear Heater is made, then the LED is On.

2. ALERT – (GREEN LED) This LED will indicate the status of the Horn output. If the request to turn on the Horn is made, then the LED is On.

3. FWD – (GREEN LED) This LED will indicate the status of the Tumbler Forward direction output. If the request to tumble the drum in the Forward direction is made, then the LED is On.

4. REV – (GREEN LED) This LED will indicate the status of the Tumbler Reverse direction output. If the request to tumble the drum in the Reverse direction is made, then the LED is On.

5. AIR JET – (GREEN LED) This LED will indicate the status of the Air Jet output. If the request to turn on the Air Jet is made, then the LED is On.

6. FAN – (GREEN LED) This LED will indicate the status of the Fan output. If the request to turn on the Fan (Blower) is made, then the LED is On.

7. F_HEAT – (GREEN LED) This LED will indicate the status of the Front Heat output. If the request to turn on the Front Heater is made, then the LED is On.

8. AUX – (GREEN LED) This is for a spare output to be programmed.

9. PGR1 – (GREEN LED) This is for a spare output to be programmed.

10. PGR2 – (GREEN LED) This is for a spare output to be programmed.

11. PGR3 – (GREEN LED) This is for a spare output to be programmed.

12. PGR4 – (GREEN LED) This is for a spare output to be programmed.

13. OCL1 – (GREEN LED) This LED will indicate the status of the Open Collector #1 output. If the request to turn on the Open Collector #1 is made, then the LED is On. (Programmable and Defaulted to Front Door Open)

14. OCL2 – (GREEN LED) This LED will indicate the status of the Open Collector #2 output. If the request to turn on the Open Collector #2 is made, then the LED is On. (Programmable and Defaulted to Front Door Closed)

15. OCL3 – (GREEN LED) This LED will indicate the status of the Open Collector #3 output. If the request to turn on the Open Collector #3 is made, then the LED is On. (Programmable and Defaulted to Lint Drawer)

16. OCL4 – (GREEN LED) This LED will indicate the status of the Open Collector #4 output. If the request to turn on the Open Collector #4 is made, then the LED is On. (Programmable and Defaulted to Front Down)

17. OCL5 – (GREEN LED) This LED will indicate the status of the Open Collector #5 output. If the request to turn on the Open Collector #5 is made, then the LED is On. (Programmable and Defaulted to Rear Down)

18. OCL6 – (GREEN LED) This LED will indicate the status of the Open Collector #6 output. If the request to turn on the Open Collector #6 is made, then the LED is On. (Programmable and Defaulted to Rear Door Open)

19. OCL7 – (GREEN LED) This LED will indicate the status of the Open Collector #7 output. If the request to turn on the Open Collector #7 is made, then the LED is On. (Programmable and Defaulted to Rear Door Closed)

20. OCL8 – (GREEN LED) This LED will indicate the status of the Open Collector #8 output. If the request to turn on the Open Collector #8 is made, then the LED is On. (Programmable and Defaulted to Spare)

21. EOC – (GREEN LED) This LED will indicate the status of the End Of Cycle light output. If the request to turn on the End Of Cycle light is made, then the LED is On.

ADC 113100 **1** - 08/19/99-25 **2** - 09/30/99-25 **3** - 01/05/00-20
4 - 02/05/00-20 **5** - 06/05/00-20 **6** - 08/29/00-50
7 * 10/24/00-25 **8 *** 12/26/00-25 **9 *** 03/15/01-25
10 - 04/25/01-25

American Dryer Corp.